BAP/BXP30

A02 Build

2010.05.22

INVENTEC			
TITLE BAP/BXP30			
SIZE Custom	CODE CS	DOC.NUMBER CS-131	REV X01
CHANGE by IEC	DATE Saturday, May 22, 2010	SHEET 1 of 41	

1. Schematic Page Description :

BAP30/BXP30 Schematic Ver : X01

01. Title
02. Schematic Page DESCR
03. Block Diagram
04. Power Block Diagram
05. Annotations
06. Schematic Modify
07. Timing Diagram
08. PWR_Adaptor in/Charge
09. PWR_CPU Core Power
10. PWR_Graphics Core
11. PWR_DDR PWR
12. PWR_1.1VS_VTT/1.1VS
13. PWR_5VA/5VLA/3VA/3VLA
14. PWR_3VS/5VS/1.8VS/5VUSB
15. Processor(1/3)
16. Processor(2/3)
17. Processor(3/3)
18. PCH_RTC,SATA,PCI-E,CLK
19. PCH_DMI,MISC,LVDS,CRT
20. PCH_USB, PCI,NVRAM,XDP
21. PCH Power 1
22. PCH Power 2
23. Clock Generator
24. DDR3 SDRAM SO-DIMM 0/1
25. LCD/CAM/DVI PLUG/CRT
26. USB/LID/LED
27. BCM57760
28. 3G/USIM
29. HDD/ODD/DAUGHTER CONN
30. KBC ITE8502E*
31. EASY PORT
32. Hybrid Switch (1/2)
33. Hybrid Switch (2/2)
34. N10x PCIE/ I/O(1/6)
35. N10x Memory(2/6)
36. N10x Power(3/6)
37 1.8V/1.05V/NVDD(4/6)
38. DDR3 VRAM
39. CX20672-11Z
40. Card reader/ Audio
41. POWER SEQUENCE

2. PCI & IRQ & DMA Description :

IDSEL	CHIP
None	

PCIINT	CHIP	Interface
None		

REQ	CHIP
None	

3. USB & PCI-Express & SATA Description :

USB Port	DEVICE	USB Port	DEVICE
Port 0	System (ESATA)	Port 7	Bluetooth
Port 1	System	Port 8	
Port 2	System	Port 9	Web Cam
Port 3	System	Port 10	
Port 4	CardReader	Port 11	FingerPrint
Port 5		Port 12	
Port 6		Port 13	3G

PCI-E	DEVICE
Port 1	New Card
Port 2	Docking
Port 3	Mini Card(WLAN)
Port 4	Mini Card(3G)
Port 5	Mini Card(ROBSON)
Port 6	Giga-LAN

SATA	DEVICE
Port 1	HDD
Port 2	E-SATA
Port 4	BAY
Port 5	None

3. Block Diagram :

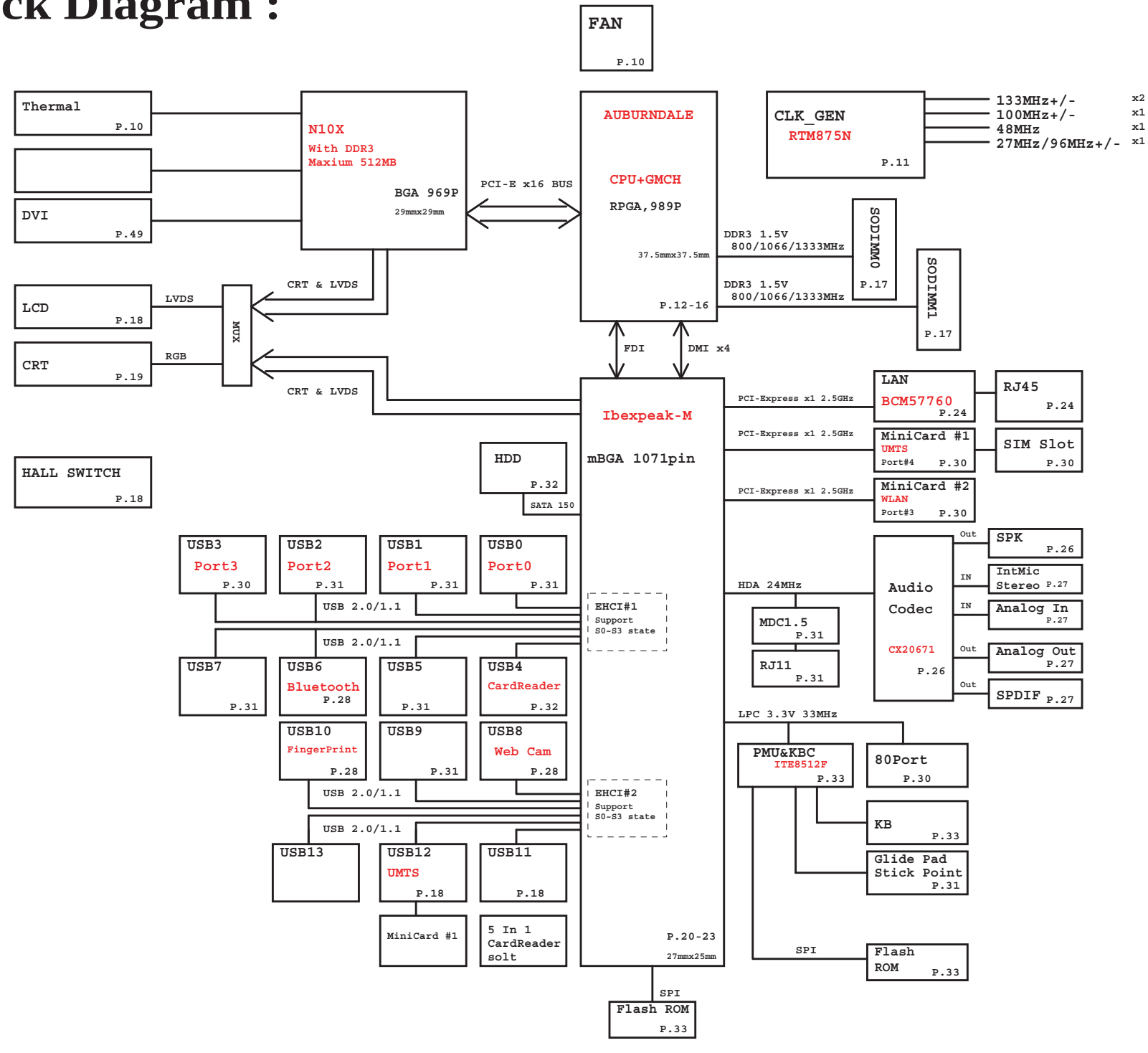

INVENTEC

TITLE
BAP/BXP30
Block Diagram

SIZE	CODE	DOC.NUMBER	REV
Custom	CS	CS-131	X01

SHEET 3 of 41

CHANGE by IEC | DATE Friday, May 21, 2010

Power Block Diagram :

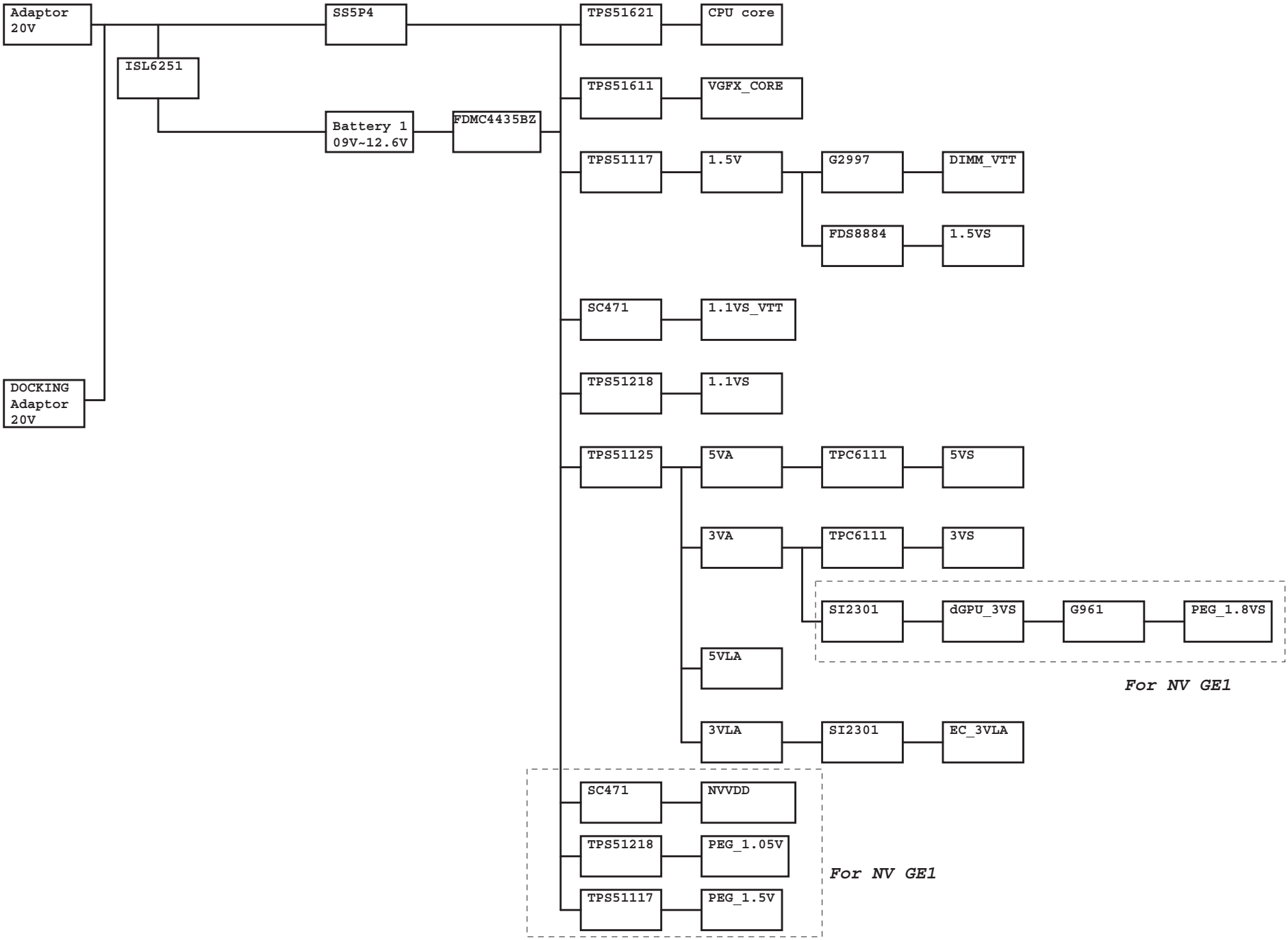

INVENTEC			
TITLE BAP/BXP30 Power Block Diagram			
SIZE Custom	CODE CS	DOC.NUMBER CS-131	REV X02
CHANGE by IEC	DATE Friday, May 21, 2010	SHEET 4 of 41	

4. Net name Description :

Voltage Rails

DCIN	Primary DC system power supply
3VLA	3.3V always on power rail by DCIN
5VLA	5.0V always on power rail by DCIN
EC_3VLA	3.3V always on power rail by 5VAUXON
3VA	3.3V always on power rail by LATCH_ON
5VA	5.0V always on power rail by LATCH_ON
3VM	3.3V power rail by SUSM#
1.05VM	1.05V switched power rail by SUSM#
1.5V	1.5V switched power rail by SUSC#
1.8V	1.8V power rail by SUSC#
3VS	3.3V power rail by SUSB#
5VS	5.0V power rail by SUSB#
1.5VS	1.5V power rail by SUSB#
1.05VS	1.05V power rail by SUSB#
PWR_DIMM_VTT	0.75V DDR Termination Voltage by SUSB#
VGFX_CORE	1.05V power rail for UMA by SUSB#
PEG_1.8VS	1.8V switched power rail for NB9x by SUSB#
PEG_PEX_1.1VS	1.1V switched power rail for NB9x by SUSB#
PEG_NVDD	Variable switched power rail for NB9x by SUSB#
Vcore_CPU	Core switched power rail for CPU

Part Naming Conventions

C	=	Capacitor	Q	=	Transistor
CN	=	Connector	R	=	Resistor
D	=	Diode	RP	=	Resistor Pack
F	=	Fuse	U	=	Arbitrary Logic Device
L	=	Inductor	Y	=	Crystal and Osc

Name Suffix

#	=	Active Low signal
NU	=	No Stuff

5. Board Stack up Description

PCB Layers

Layer 1	Component Side, Microstrip signal Layer
Layer 2	Ground Plane
Layer 3	Stripline Layer
Layer 4	Power Plane
Layer 5	Stripline Layer
Layer 6	Stripline Layer
Layer 7	Ground Plane
Layer 8	Solder Side,Microstrip signal Layer

	Differential Impedance for Microstrip(5-mils)	Differential Impedance for Stripline(4-mils)
Host Clock	95 ohm +/- 20%	100 ohm +/- 20%
PCI-E Clock	95 ohm +/- 20%	100 ohm +/- 20%
DDR2 CLK	70 ohm +/- 20%	70 ohm +/- 20%
DDR2 Strobe	85 ohm +/- 20%	90 ohm +/- 20%
DMI Bus	95 ohm +/- 20%	100 ohm +/- 20%
PCIE Bus	95 ohm +/- 20%	100 ohm +/- 20%
SDVO	95 ohm +/- 20%	100 ohm +/- 20%
SATA	95 ohm +/- 20%	100 ohm +/- 20%
USB	90 ohm +/- 20%	95 ohm +/- 20%
LVDS		100 ohm +/- 20%
Lan	95 ohm +/- 20%	100 ohm +/- 20%

Power Rail	Destination	Voltage	S0 Current
VCC_CORE	Penryn HFM:	1.3319V~1.4375V~1.4591V	36A
	LFM:	0.9221V~0.9625V~0.9739V	
1.05VS	Penryn: AGTL+ termination	1V~1.05V~1.10V	4.5A
	Cantiga GM: Core	0.997V~1.05V~1.102V	8.7A
	Cantiga GM: PCIE	0.9975V~1.05V~1.1025V	1.78A
	Cantiga GM:Core+IMEL+HSIO	0.9975V~1.05V~1.1025V	2.898A
	Cantiga GM:VCC_GMCH	0.997V~1.05V~1.102V	10.154A
	Cantiga GM:VCCA_SM_CK and NCTF	0.997V~1.05V~1.102V	37.95mA
	Cantiga GM:VCC_DMI	0.997V~1.05V~1.102V	456mA
	Cantiga GM:VCCA_SM	0.997V~1.05V~1.102V	747.5mA
	Cantiga GM:VTT	0.997V~1.05V~1.102V	852mA
	ICH9M:VCC1_05	0.997V~1.05V~1.102V	1.634A
	ICH9M:DMI	0.997V~1.05V~1.102V	48mA
	ICH9M:CPU_IO	0.997V~1.05V~1.102V	2mA
1.5VS	Penryn PLL	1.425V~1.5V~1.575V	130mA
	Cantiga GM: QDAC	1.425V~1.5V~1.575V	0.5mA
	Cantiga GM: LVDS	1.71V~1.8V~1.89V	60.31mA
	Cantiga GM: TVDAC	1.425V~1.5V~1.575V	35mA
	Cantiga GM: Various PLLS analog supply	1.425V~1.5V~1.575V	485mA
	Cantiga GM: VCC_SM_CK	1.425V~1.5V~1.575V	149.5mA
	Cantiga GM: VCC_SM	1.425V~1.5V~1.575V	3.1625A
	ICH9M:PCIE_ICH	1.425V~1.5V~1.575V	646mA
	ICH9M:SATA_ICH	1.425V~1.5V~1.575V	1.342A
	ICH9M:VCC_GLAN	1.425V~1.5V~1.575V	80mA
	Mini Card:		
	Express Card:	1.425V~1.5V~1.575V	650mA
1.5V	Cantiga GM: DDRIII System Memory	1.425V~1.5V~1.575V	3.1A(800M) 4.1A(1067M)
0.75VDDT_DDRIII:DDRIII Terminator:		0.7125V~0.75V~0.7875V	1.0A
3VS	Cantiga GM: HV CMOS	3.135V~3.3V~3.465V	105.3mA
	Cantiga GM: VCCS_TVDAC	3.135V~3.3V~3.465V	78mA
	ICH9M:VCC3_3	3.135V~3.3V~3.465V	308mA
	ICH9M:VCCGLAN3_3	3.135V~3.3V~3.465V	1mA
	Thermal Sensor:	3.0V~3.3V~3.6V	5mA
	Mini Card: UMTS		
	Express Card:	3.135V~3.3V~3.465V	1.3A
	CLK Generator: ICS9LPRS397BKLFT	3.135V~3.3V~3.465V	500mA
	Mini Card: WirelessLan		
	Bluetooth:	3.0V~3.3V~3.6V	
	Super I/O: IT8305E		
	Azalia Codec: ALC262		
	Azalia MDC:		
1.8VS	DVI	3.0V~3.3V~3.6V	120mA
3VA	ICH9M: RTC	2V~3.3V~3.465V	6uA
	ICH9M:VCCSUS3_3	3.135V~3.3V~3.465V	212mA
	ICH9M:VCCCL3_3	3.135V~3.3V~3.465V	73mA
	ICH9M:VCCLAN3_3	3.135V~3.3V~3.465V	78mA
	LCD:	3.0V~3.3V~3.6V	2A
	Lan:82567LM	1.0V and 1.8V	Each 1A
	Azalia MDC:		
	Flash ROM: BIOS	3.0V~3.3V~3.6V	
5VS	Cardreader: GL827	3.0V~3.3V~3.6V	
	Azalia Codec: ALC262	3.0V~3.3V~3.6V	
	HDD: SATA	4.75V~5.0V~5.25V	Max: 1.5A ; R/W: 460mA ; STDBY: 70mA
	ODD: SATA	4.75V~5.0V~5.25V	Max: 1.5A ; R/W: 900mA ; STDBY: 45mA
	Audio AMP: G1432		
	Inverter:		
	WebCam	4.75V~5.0V~5.25V	1A
5VA	USB: x 2 ports	5VA	1.5A
	USB and ESATA	5VA	2A
5VLA	Control Power		
3VLA	EC: ITE8512E	3.0V~3.3V~3.6V	300mA

6.Schematic modify Item and History :

8.SYSTEM POWER SEQUENCE :

Power on/off sequence AC insert(First)

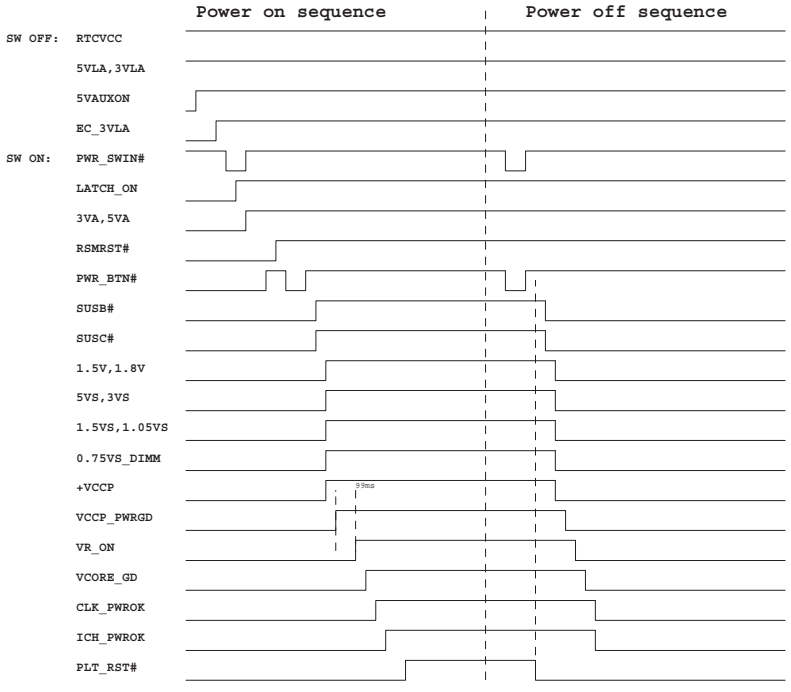

Battery only Power on/off sequence

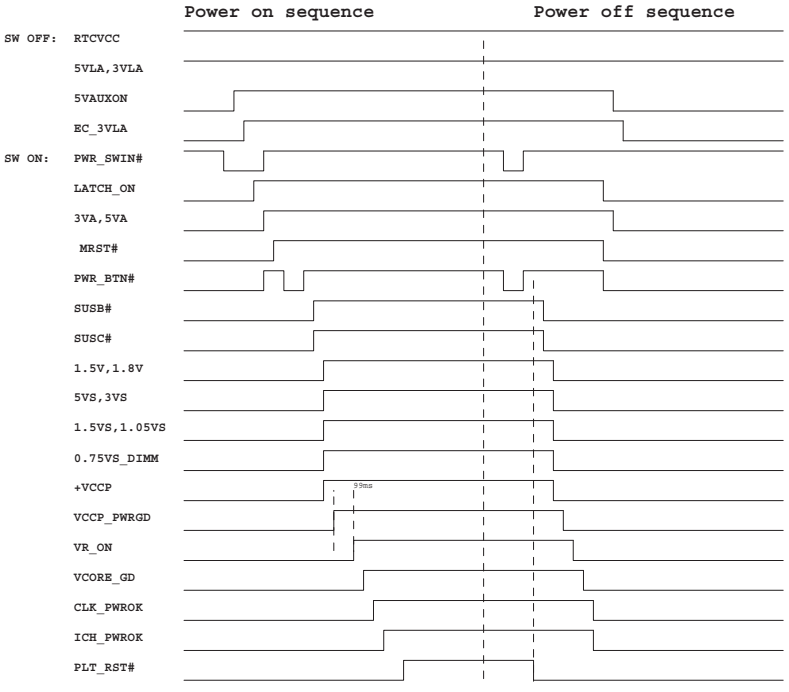

Power on/off sequence AC insert(S4)

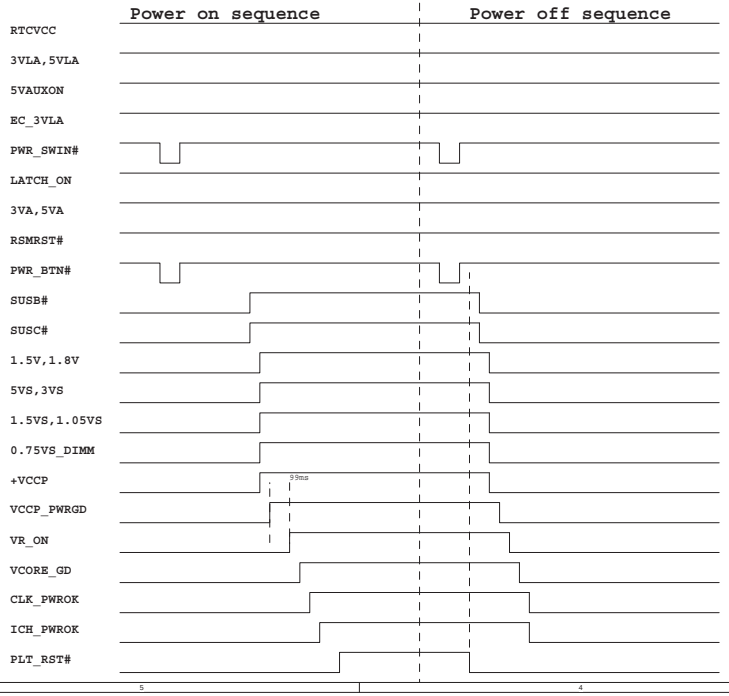

Suspend resume sequence(S3)

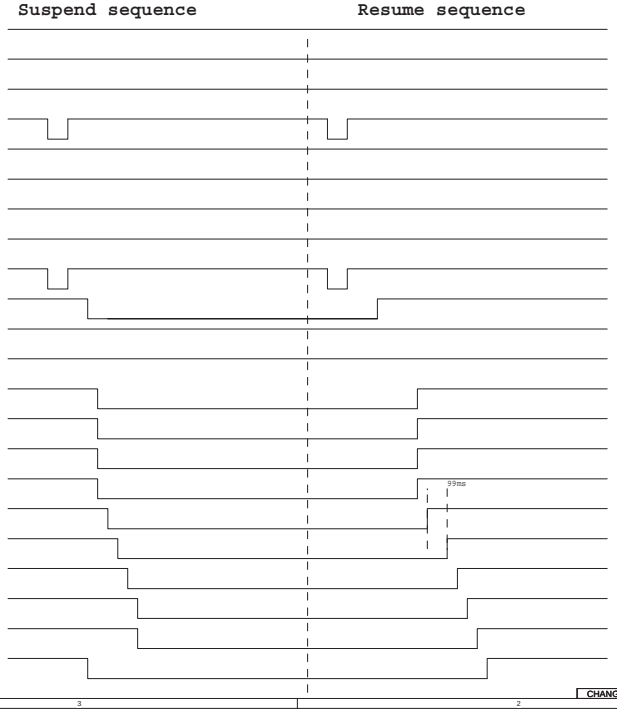

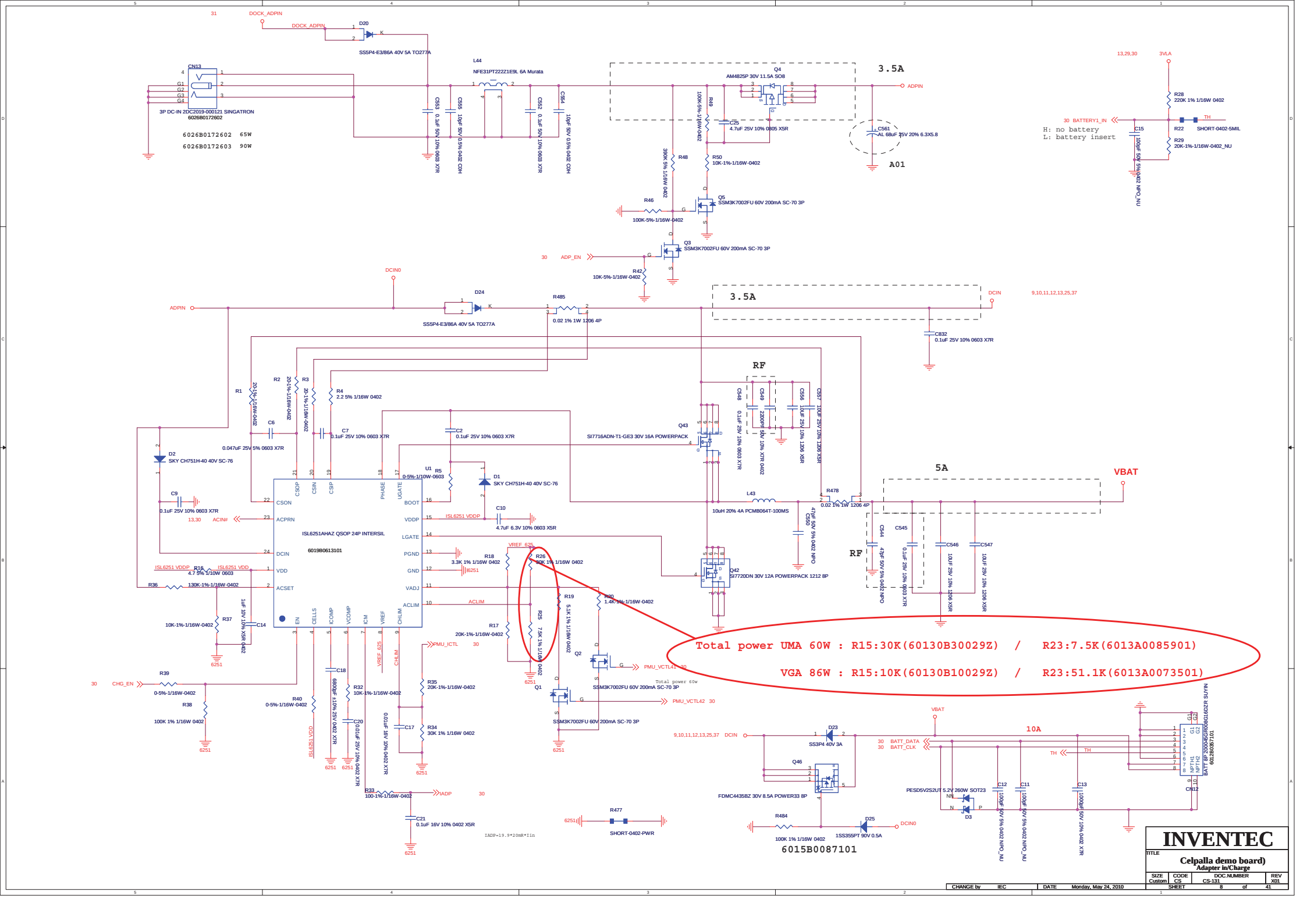
DOCK_ADPIN
D20
SS5P4-E3/86A 40V 5A TO277A
CN13
3P DC-IN 2DC2019-000121 SINGATRON
6026B0172602
6026B0172602 65W
6026B0172603 90W
L44
NFE31PT222Z1E9L 6A Murata
C553 0.1uF 50V 10% 0603 X7R
C555 10uF 50V 0.5% 0402 C0H
C552 0.1uF 50V 10% 0603 X7R
C554 10uF 50V 0.5% 0402 C0H
Q4
AM4825P 30V 11.5A SO8
3.5A
ADPIN
C25
4.7uF 25V 10% 0805 X5R
C561
AL 68uF 25V 20% 6.3X5.8
A01
R49
100K-5%-1/16W-0402
R48
390K 5% 1/16W 0402
R50
10K-1%-1/16W-0402
R46
100K-5%-1/16W-0402
Q5
SSM3K7002FU 60V 200mA SC-70 3P
Q3
SSM3K7002FU 60V 200mA SC-70 3P
ADP_EN
R42
10K-5%-1/16W-0402
13,29,30
3VLA
R28
220K 1% 1/16W 0402
BATTERY1_IN
H: no battery
L: battery insert
C15
100uF 50V 5% 0402 NPO_NU
R22
SHORT-0402-5MIL
R29
20K-1%-1/16W-0402_NU
DCIN0
D24
SS5P4-E3/86A 40V 5A TO277A
R485
0.02 1% 1W 1206 4P
DCIN
9,10,11,12,13,25,37
C832
0.1uF 25V 10% 0603 X7R
RF
C348 0.1uF 25V 10% 0603 X7R
C549 2200PF 50V 10% X7R 0402
C556 10uF 25V 10% 1206 X5R
C557 10uF 25V 10% 1206 X5R
Q43
SI7716ADN-T1-GE3 30V 16A POWERPACK
R1 20-1%-1/16W-0402
R2 20-1%-1/16W-0402
R3 20-1%-1/16W-0402
R4 2.2 5% 1/16W 0402
C6 0.047uF 25V 5% 0603 X7R
C7 0.1uF 25V 10% 0603 X7R
C2 0.1uF 25V 10% 0603 X7R
D2 SKY CH751H-40 40V SC-76
C9 0.1uF 25V 10% 0603 X7R
13,30 ACIN#
U1 ISL6251AHAZ QSOP 24P INTERSIL
6019B0613101
CSON
ACPRN
DCIN
VDD
ACSET
CSOP
CSIN
CSP
PHASE
UGATE
BOOT
VDDP
LGATE
PGND
GND
VADJ
ACLIM
EN
CELLS
ICOMP
VCOMP
ICM
VREF
CHLIM
R5 0-5%-1/10W-0603
D1 SKY CH751H-40 40V SC-76
C10 4.7uF 6.3V 10% 0603 X5R
ISL6251 VDDP
R16 4.7 5% 1/10W 0603
ISL6251 VDD
R36 130K-1%-1/16W-0402
R37 10K-1%-1/16W-0402
C14 1uF 10V 10% X5R 0402
R18 3.3K 1% 1/16W 0402
VREF_625
R26 30K 1% 1/16W 0402
R25 7.5K 1% 1/16W 0402
R17 20K-1%-1/16W-0402
ACLIM
R19 5.1K 1% 1/16W 0402
R40 1.4K-1%-1/16W-0402
Q2
SSM3K7002FU 60V 200mA SC-70 3P
Q1
SSM3K7002FU 60V 200mA SC-70 3P
PMU_ICTL
PMU_VCTL41
PMU_VCTL42
Total power 60w
L43
10uH 20% 4A PCMB064T-100MS
R478
0.02 1% 1W 1206 4P
C550 47uF 50V 5% 0402 NPO
Q42
SI7720DN 30V 12A POWERPACK 1212 8P
5A
VBAT
C544 47uF 50V 5% 0402 NPO
C545 0.1uF 25V 10% 0603 X7R
C546 10uF 25V 10% 1206 X5R
C547 10uF 25V 10% 1206 X5R
Total power UMA 60W : R15:30K(60130B30029Z) / R23:7.5K(6013A0085901)
VGA 86W : R15:10K(60130B10029Z) / R23:51.1K(6013A0073501)
CHG_EN
R39 0-5%-1/16W-0402
R38 100K 1% 1/16W 0402
R40 0-5%-1/16W-0402
C18 680pF 10% 25V 0402 X7R
R32 10K-1%-1/16W-0402
C20 0.01uF 25V 10% 0402 X7R
C17 0.01uF 16V 10% 0402 X7R
R35 20K-1%-1/16W-0402
R34 30K 1% 1/16W 0402
R33 100-1%-1/16W-0402
IADP
C21 0.1uF 16V 10% 0402 X5R
IADP=19.9*20mR*Iin
R477
SHORT-0402-PWR
D23
SS3P4 40V 3A
BATT_DATA
BATT_CLK
10A
Q46
FDMC4435BZ 30V 8.5A POWER33 8P
PESD5V2S2UT 5.2V 260W SOT23
D3
C12 100pF 50V 5% 0402 NPO_NU
C11 100pF 50V 5% 0402 NPO_NU
C13 1000pF 50V 10% 0402 X7R
C812
BATT BP-2000-6G0G0G1G2R SUYIN
6012B0367101
R484
100K 1% 1/16W 0402
D25
1SS355PT 90V 0.5A
DCIN0
6015B0087101
INVENTEC
TITLE
Celpalla demo board)
Adapter in/Charge
SIZE Custom
CODE CS
DOC.NUMBER CS-131
REV X01
CHANGE by IEC
DATE Monday, May 24, 2010
SHEET 8 of 41

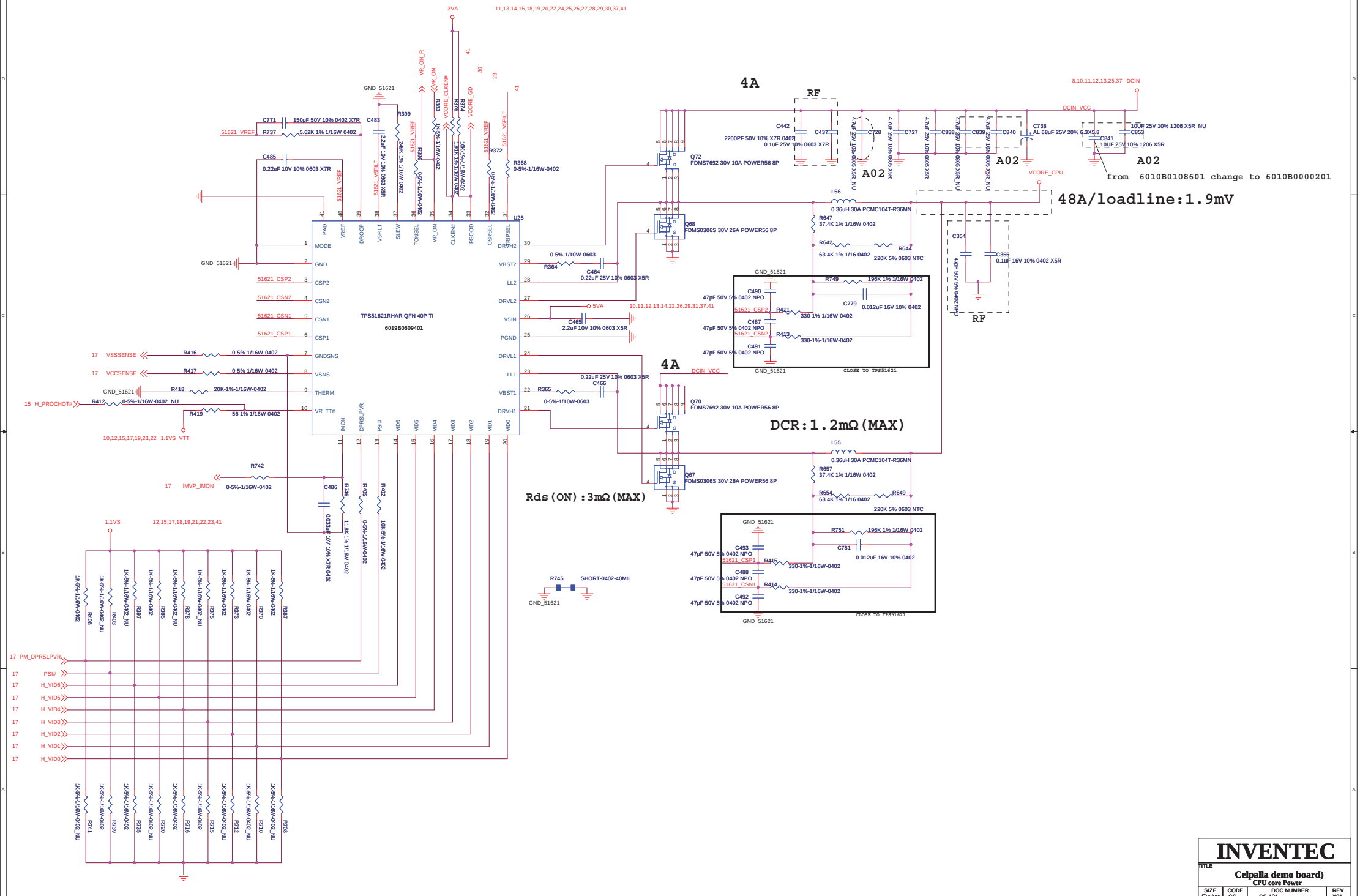

INVENTEC			
TITLE: Celpalla demo board) CPU core Power			
SIZE: Custom	CODE: CS	DOC.NUMBER: CS-131	REV: X01
CHANGE by: IEC	DATE: Monday, May 24, 2010	SHEET 9 of 41	

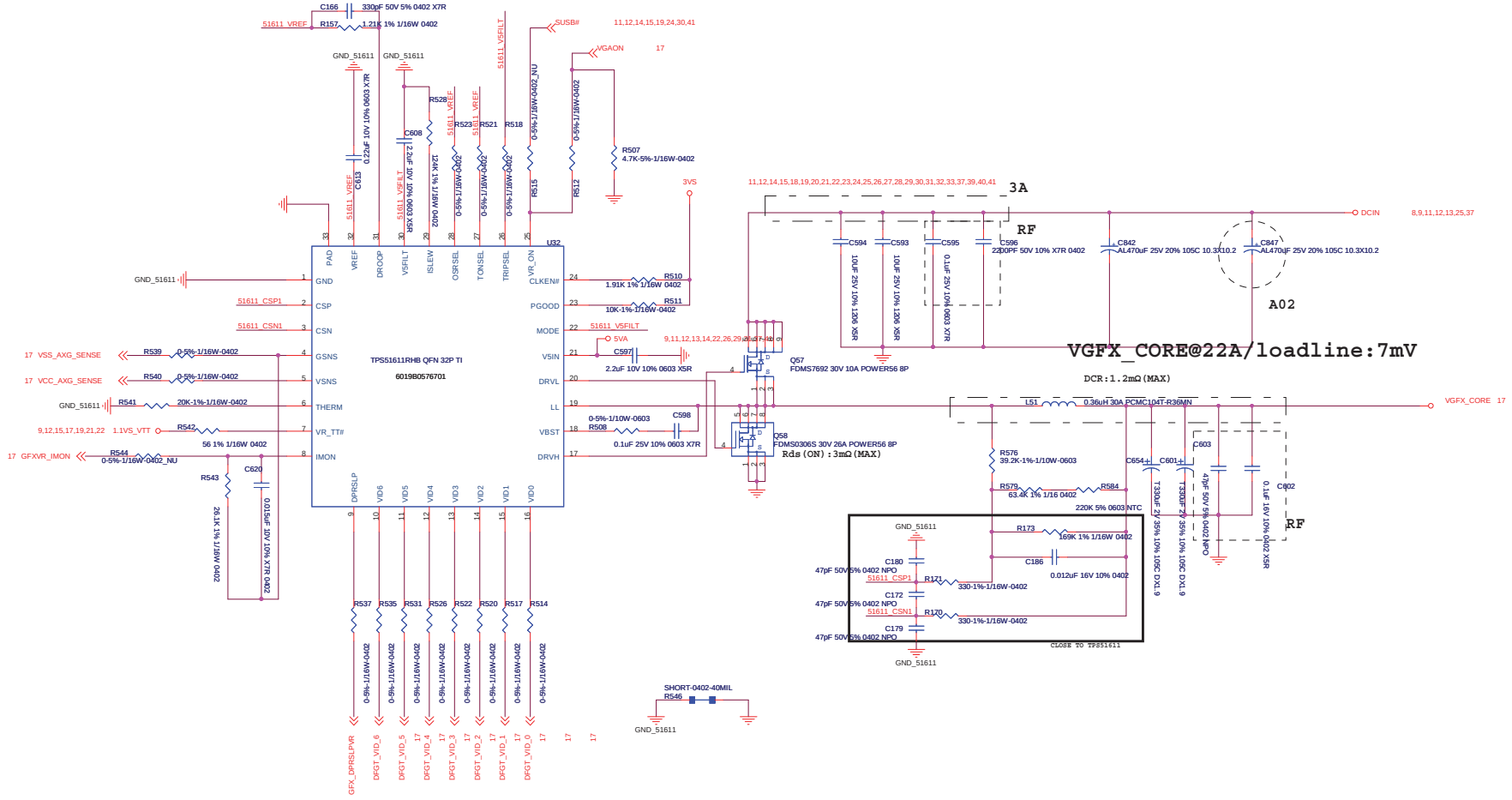

INVENTEC			
TITLE Celpalla demo board) VGFX			
SIZE Custom	CODE CS	DOC.NUMBER CS-131	REV X01
CHANGE by IEC	DATE Monday, May 24, 2010	SHEET 10 of 41	

DDR POWER

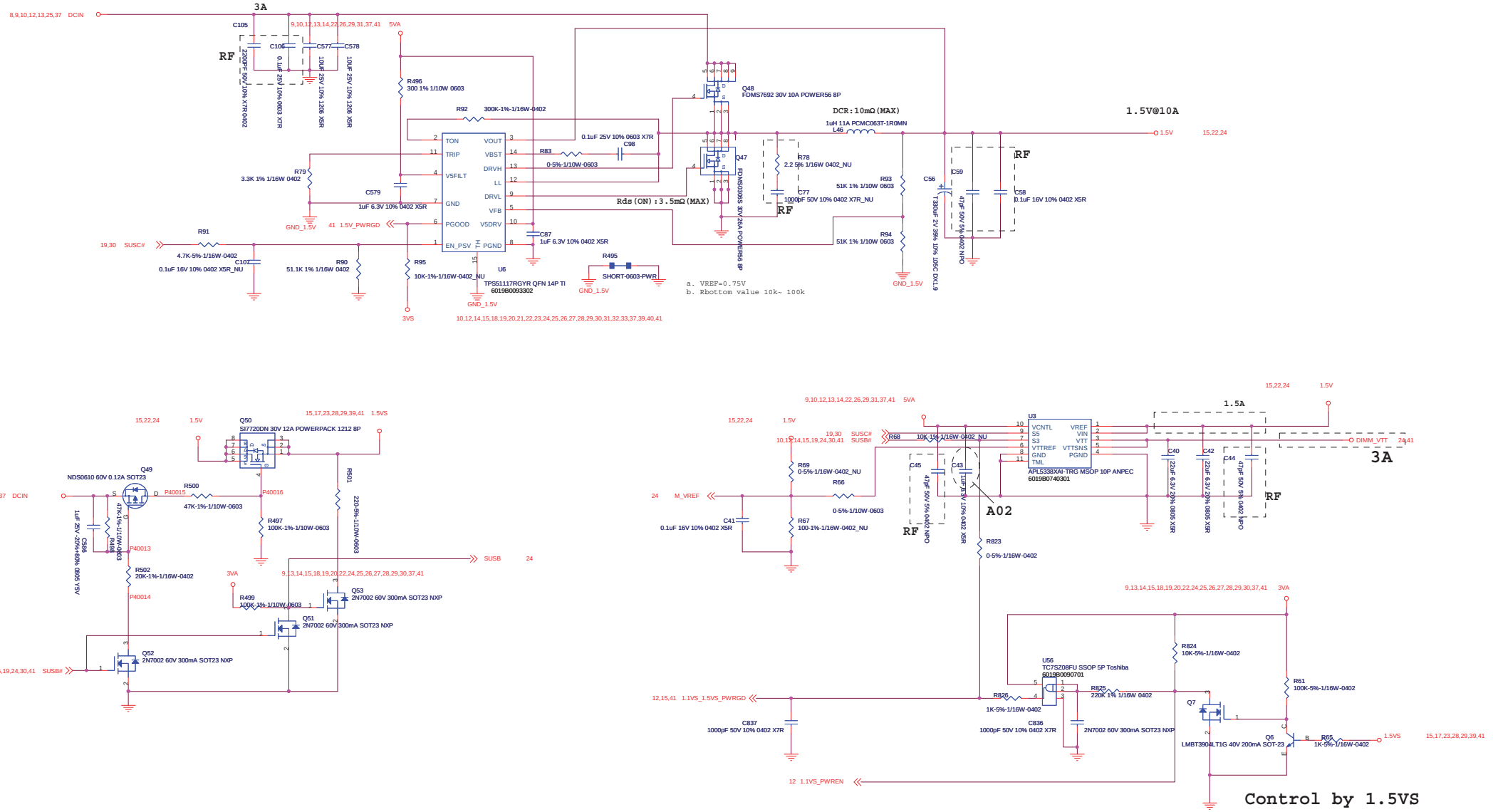

CHANGE by	IEC	DATE	Monday, May 24, 2010

INVENTEC

TITLE: Celpalla demo board) DDR PWR

SIZE	CODE	DOC.NUMBER	REV
Custom	CS	CS-131	X01

SHEET 11 of 41

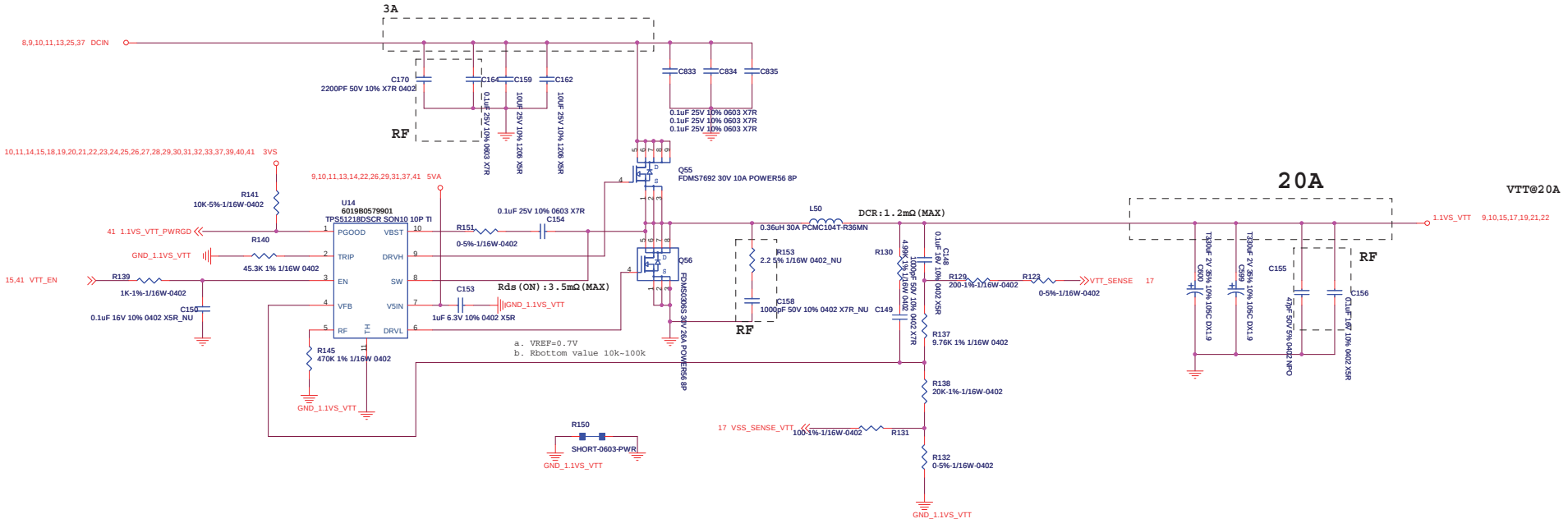

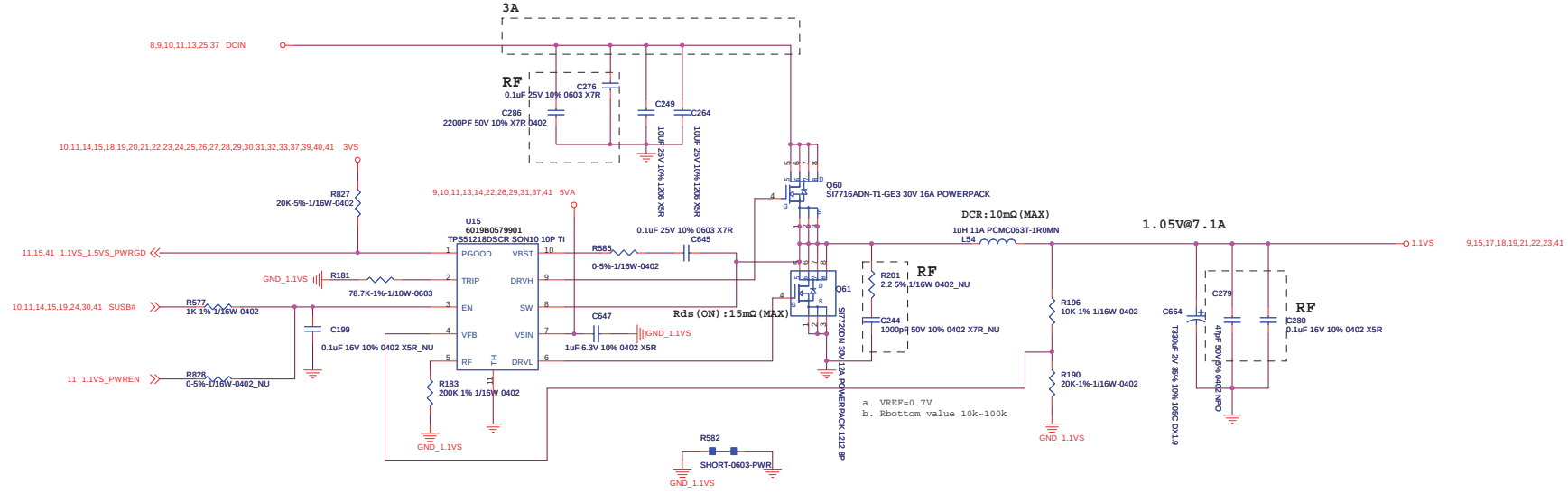

INVENTEC			
TITLE Celpalla demo board) 1.1VS_VTT/1.1VS			
SIZE Custom	CODE CS	DOC.NUMBER CS-131	REV X01
CHANGE by IEC	DATE Monday, May 24, 2010	SHEET 12 of 41	

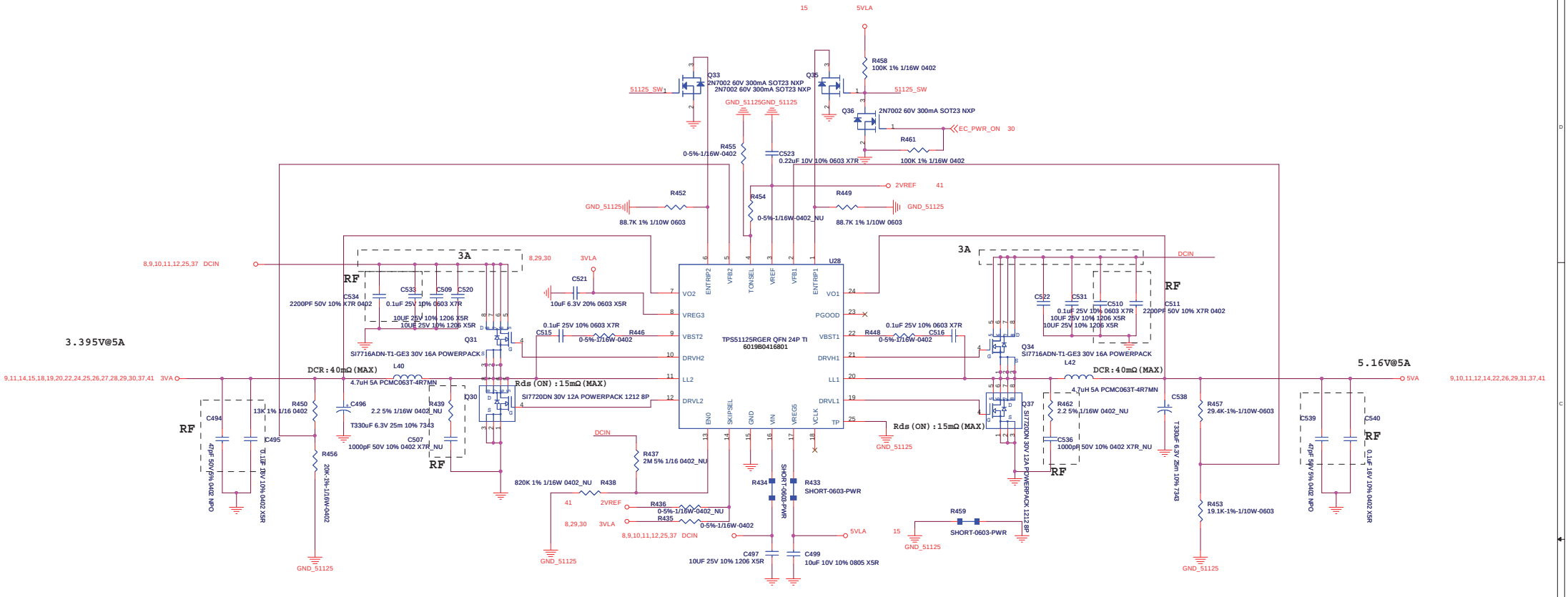

Other Trace>12mil

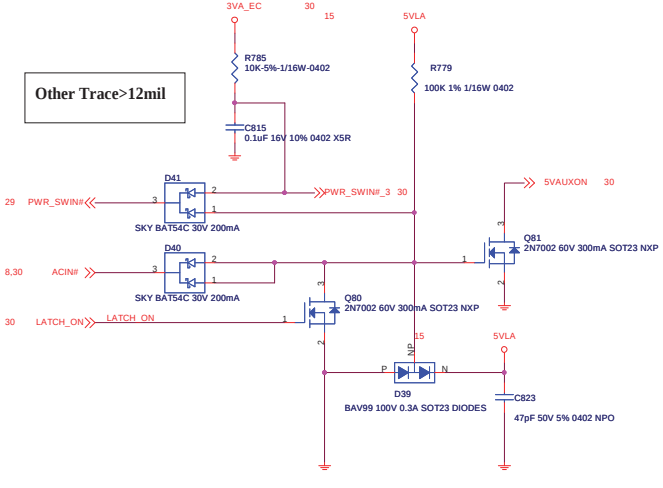

Temperature Security

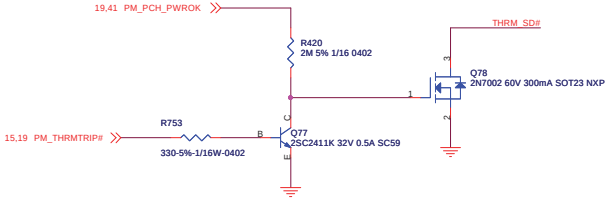

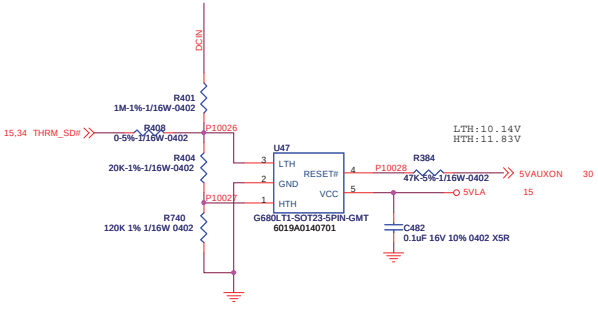

INVENTEC			
TITLE: Celpalla demo board) 5VA/5VLA/3VA/3VLA			
SIZE: Custom	CODE: CS	DOC.NUMBER: CS-131	REV: X01
CHANGE by: IEC	DATE: Monday, May 24, 2010	SHEET 13 of 41	

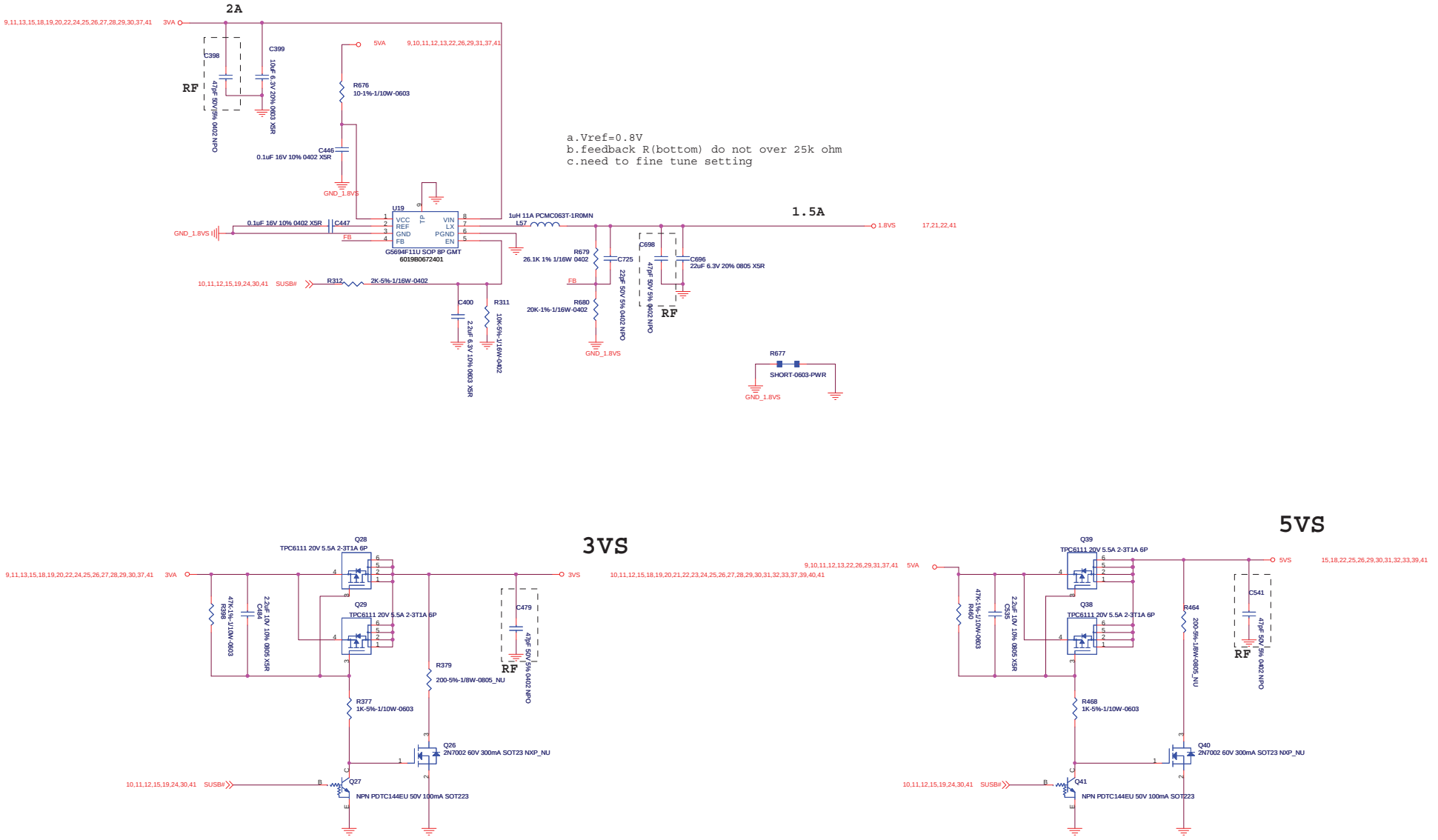

INVENTEC			
TITLE: Celpalla demo board) 3VS/5VS/1.8VS/3VM			
SIZE: Custom	CODE: CS	DOC.NUMBER: CS-131	REV: X01
CHANGE by: IEC	DATE: Monday, May 24, 2010	SHEET 14 of 41	

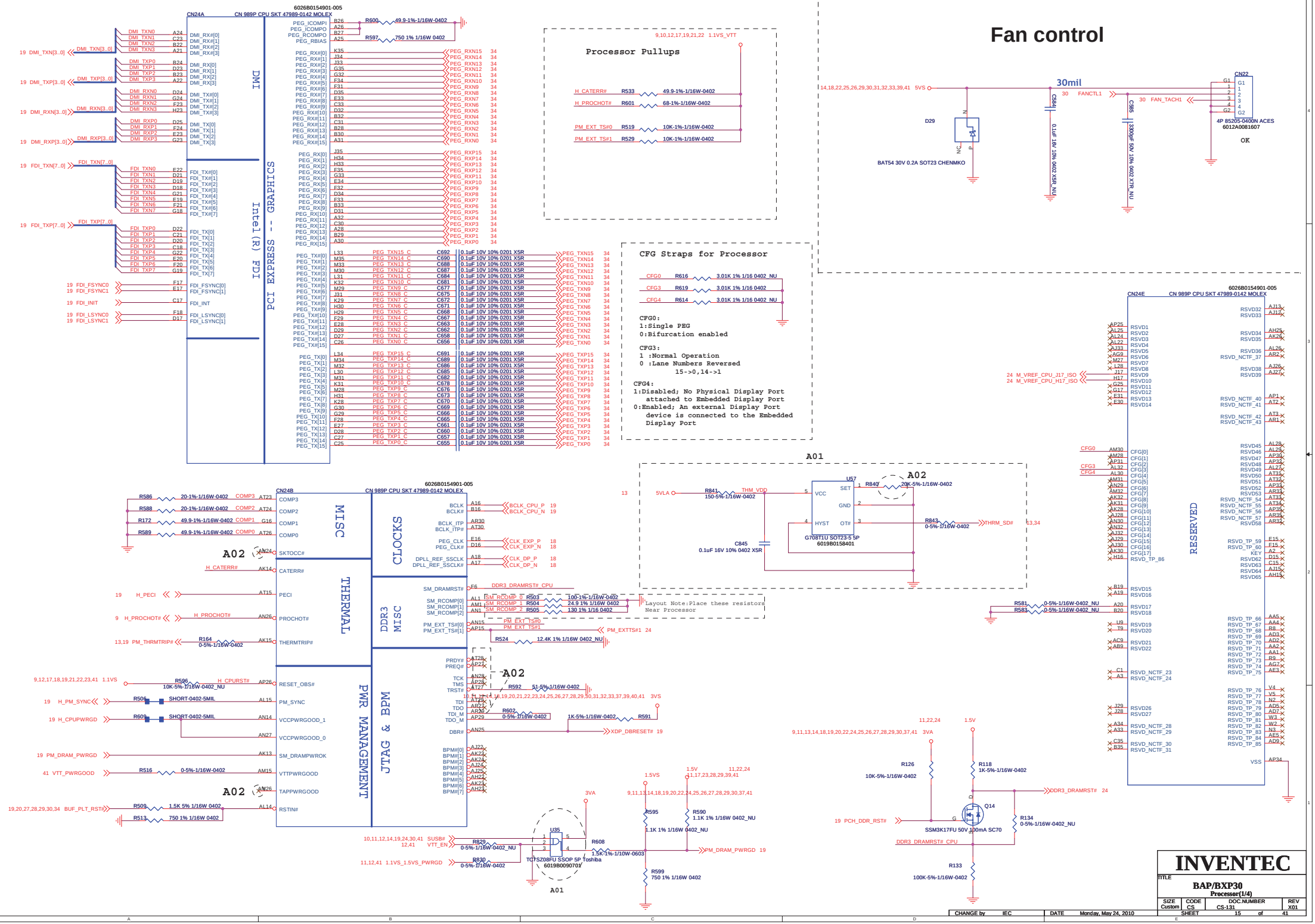
Fan control
30mil
D29
BAT54 30V 0.2A SOT23 CHENMKO
CN22
4P 85205-0400N ACES
6012A0081607
OK
Processor Pullups
CFG Straps for Processor
CFG0:
1:Single PEG
0:Bifurcation enabled
CFG3:
1 :Normal Operation
0 :Lane Numbers Reversed
15->0,14->1
CFG4:
1:Disabled; No Physical Display Port attached to Embedded Display Port
0:Enabled; An external Display Port device is connected to the Embedded Display Port
CN24A
CN 989P CPU SKT 47989-0142 MOLEX
6026B0154901-005
DMI
PCI EXPRESS -- GRAPHICS
Intel(R) FDI
CN24B
MISC
THERMAL
CLOCKS
DDR3 MISC
PWR MANAGEMENT
JTAG & BPM
CN24E
RESERVED
A01
A02
Layout Note:Place these resistors Near Processor
INVENTEC
BAP/BXP30
Processor(1/4)
CHANGE by IEC
DATE Monday, May 24, 2010
SHEET 15 of 41

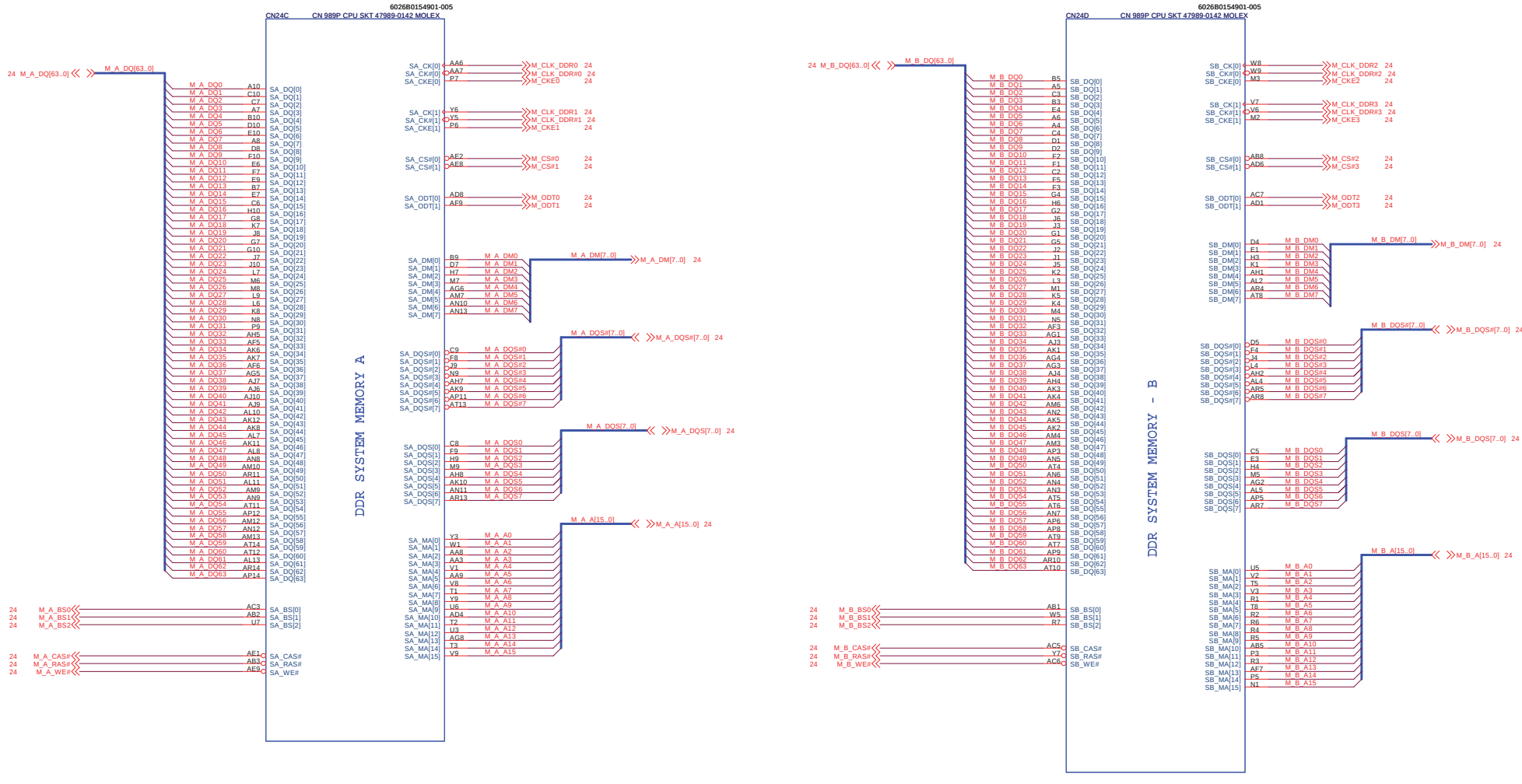

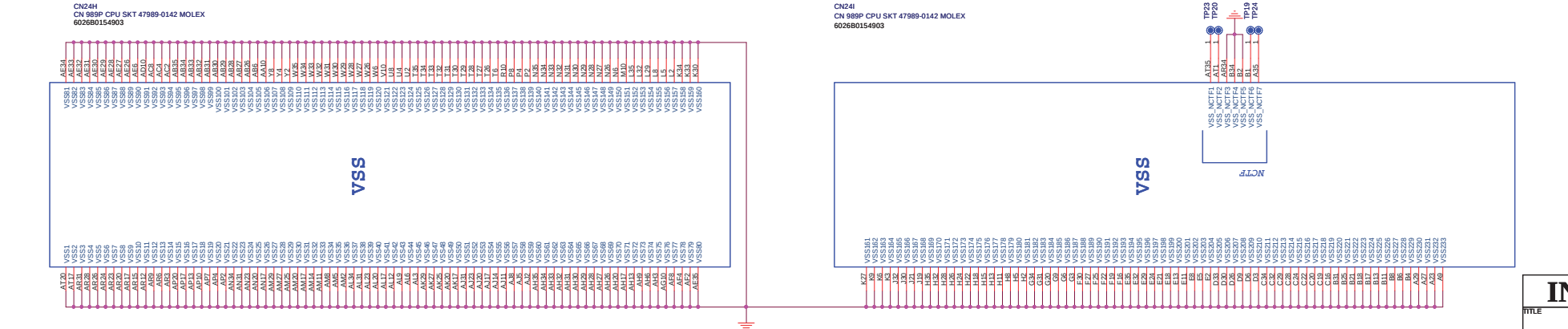

CHANGE by IEC	DATE Monday, May 24, 2010		
SIZE Custom	CODE CS	DOC.NUMBER CS-131	REV X01
		SHEET 16 of 41	

INVENTEC

TITLE

BAP/BXP30

Processor(2/4)

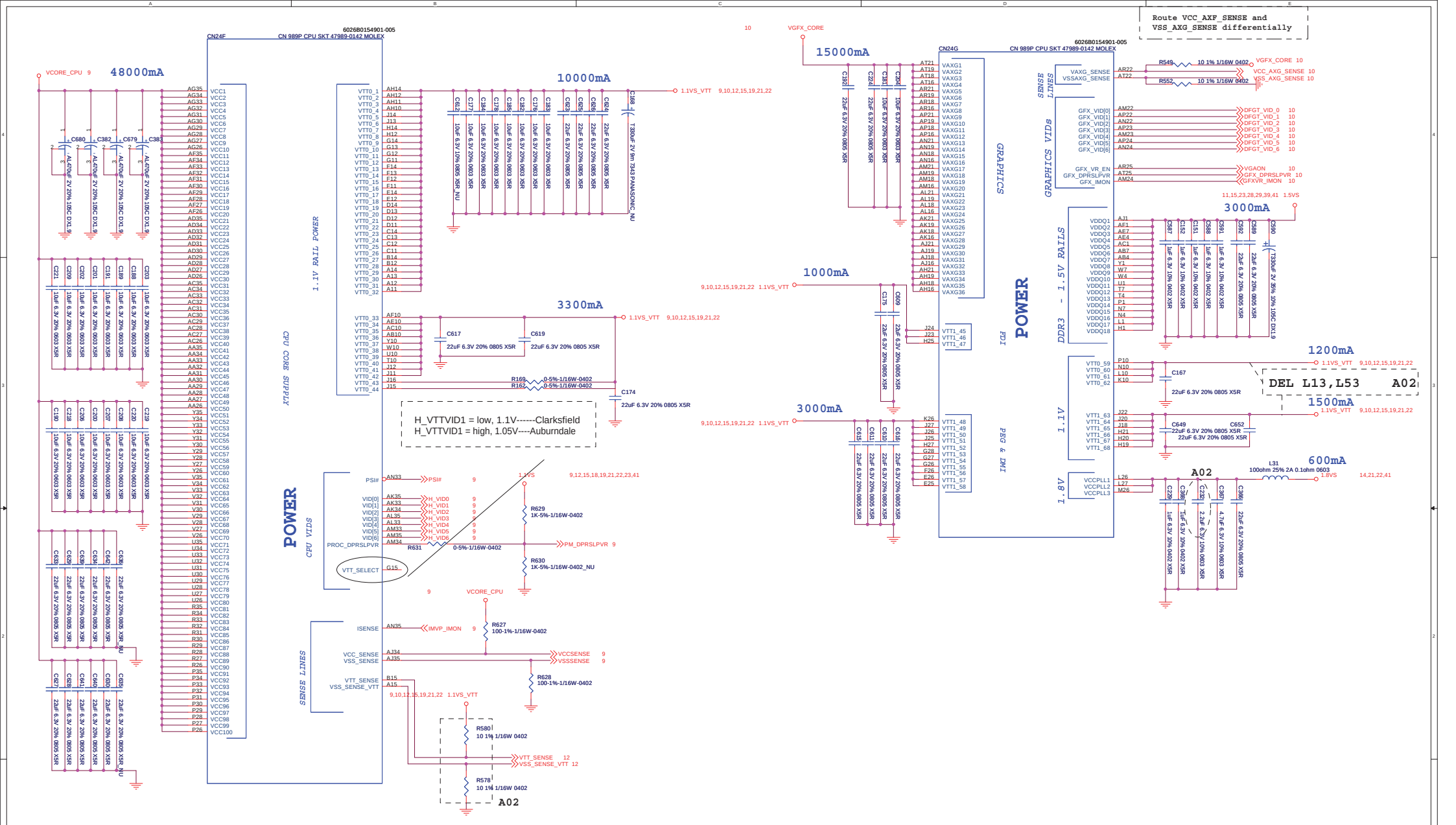

CHANGE by	IEC	DATE	Monday, May 24, 2010

INVENTEC

TITLE: Celpalla demo board) Processor(3/4)

SIZE	CODE	DOC.NUMBER	REV
Custom	CS	CS-131	X01

SHEET 17 of 41

RTC Circuit

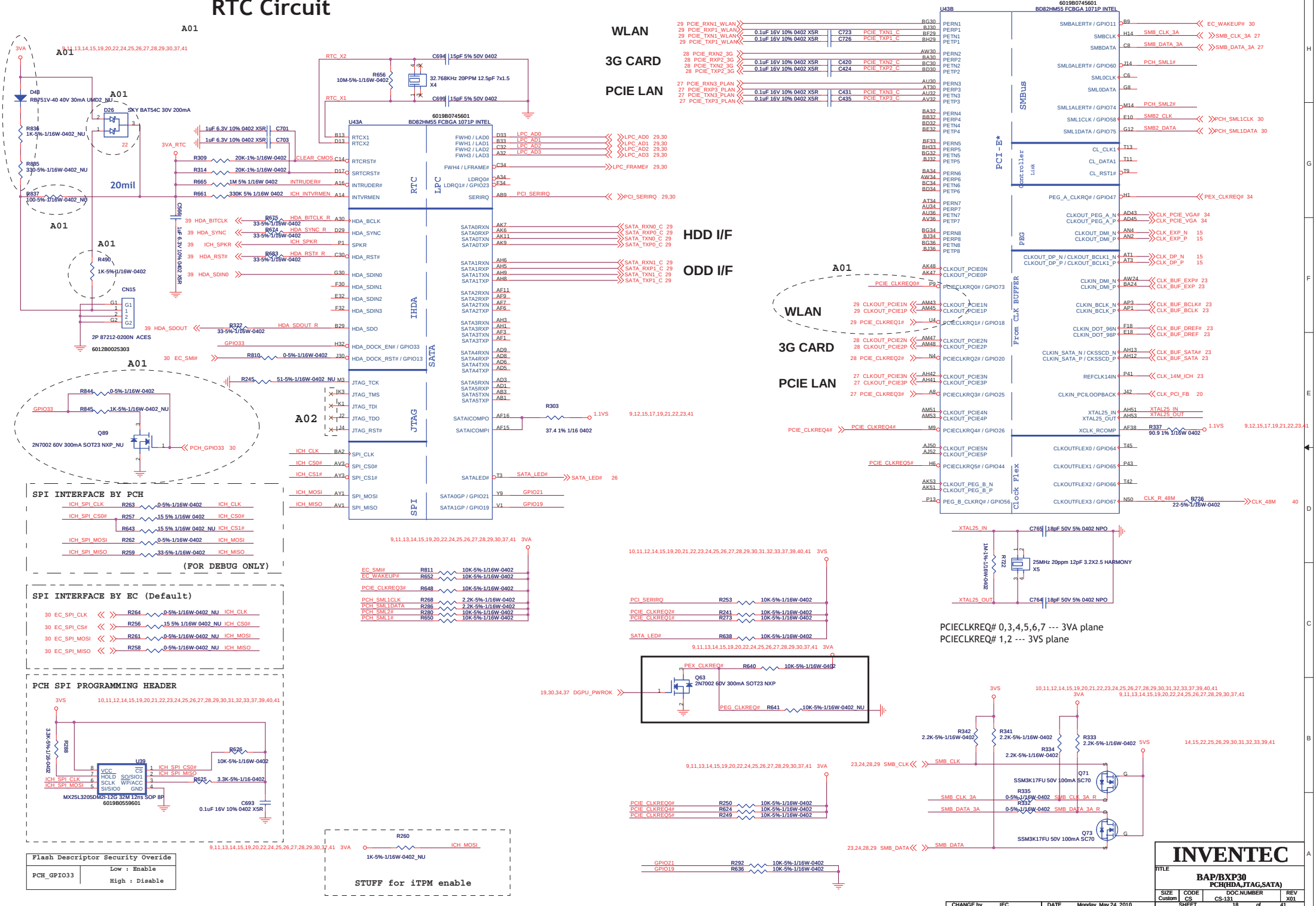
A01
3VA
D4B
RB751V-40 40V 30mA UMD2_NU
D26
SKY BAT54C 30V 200mA
R836
1K-5%-1/16W-0402_NU
R885
330-5%-1/16W-0402_NU
R837
100-5%-1/16W-0402_NU
20mil
R490
1K-5%-1/16W-0402
CN15
2P 87212-0200N ACES
6012B0025303
3VA_RTC
1uF 6.3V 10% 0402 X5R
C701
C703
R309
20K-1%-1/16W-0402
R314
20K-1%-1/16W-0402
R665
1M 5% 1/16W 0402
R661
330K 5% 1/16W 0402
CLEAR_CMOS
INTRUDER#
ICH_INTVRMEN
C666
1uF 6.3V 10% 0402 X5R
RTC_X2
RTC_X1
R656
10M-5%-1/16W-0402
32.768KHz 20PPM 12.5pF 7x1.5 X4
C694
15pF 5% 50V 0402
C699
15pF 5% 50V 0402
U43A
6019B0745601
BD82HM55 FCBGA 1071P INTEL
RTC
LPC
IHDA
SATA
JTAG
SPI
HDA_BITCLK
HDA_SYNC
ICH_SPKR
HDA_RST#
HDA_SDIN0
HDA_SDOUT
R675
33-5%-1/16W-0402
R674
33-5%-1/16W-0402
R683
33-5%-1/16W-0402
R322
33-5%-1/16W-0402
GPIO33
EC_SMI#
R810
0-5%-1/16W-0402
R245
51-5%-1/16W-0402_NU
R844
0-5%-1/16W-0402
R845
1K-5%-1/16W-0402_NU
Q89
2N7002 60V 300mA SOT23 NXP_NU
PCH_GPIO33
A02
ICH_CLK
ICH_CS0#
ICH_CS1#
ICH_MOSI
ICH_MISO
LPC_AD0
LPC_AD1
LPC_AD2
LPC_AD3
LPC_FRAME#
PCI_SERIRQ
SATA_RXN0_C
SATA_RXP0_C
SATA_TXN0_C
SATA_TXP0_C
SATA_RXN1_C
SATA_RXP1_C
SATA_TXN1_C
SATA_TXP1_C
R303
37.4 1% 1/16 0402
1.1VS
SATA_LED#
GPIO21
GPIO19
SPI INTERFACE BY PCH
ICH_SPI_CLK
ICH_SPI_CS0#
ICH_SPI_MOSI
ICH_SPI_MISO
R263
0-5%-1/16W-0402
R257
15 5% 1/16W 0402
R643
15 5% 1/16W 0402_NU
R262
0-5%-1/16W-0402
R259
33-5%-1/16W-0402
(FOR DEBUG ONLY)
SPI INTERFACE BY EC (Default)
EC_SPI_CLK
EC_SPI_CS#
EC_SPI_MOSI
EC_SPI_MISO
R264
0-5%-1/16W-0402_NU
R256
15 5% 1/16W 0402_NU
R261
0-5%-1/16W-0402_NU
R258
0-5%-1/16W-0402_NU
PCH SPI PROGRAMMING HEADER
3VS
R288
3.3K-5%-1/16W-0402
U39
VCC
HOLD
SCLK
SI/SIO0
CS
SO/SIO1
WP/ACC
GND
MX25L3205DM2I-12G 32M 12ns SOP 8P
6019B0559601
R626
10K-5%-1/16W-0402
R625
3.3K-5%-1/16-0402
C693
0.1uF 16V 10% 0402 X5R
Flash Descriptor Security Overide
PCH_GPIO33
Low : Enable
High : Disable
R260
1K-5%-1/16W-0402_NU
STUFF for iTPM enable
EC_SMI#
EC_WAKEUP#
PCIE_CLKREQ3#
PCH_SML1CLK
PCH_SML1DATA
PCH_SML2#
PCH_SML1#
R811
10K-5%-1/16W-0402
R652
10K-5%-1/16W-0402
R648
10K-5%-1/16W-0402
R268
2.2K-5%-1/16W-0402
R286
2.2K-5%-1/16W-0402
R280
10K-5%-1/16W-0402
R650
10K-5%-1/16W-0402
PCI_SERIRQ
PCIE_CLKREQ2#
PCIE_CLKREQ1#
SATA_LED#
R253
10K-5%-1/16W-0402
R241
10K-5%-1/16W-0402
R273
10K-5%-1/16W-0402
R638
10K-5%-1/16W-0402
PEX_CLKREQ#
R640
10K-5%-1/16W-0402
Q63
2N7002 60V 300mA SOT23 NXP
19,30,34,37 DGPU_PWROK
PEG_CLKREQ#
R641
10K-5%-1/16W-0402_NU
PCIE_CLKREQ0#
PCIE_CLKREQ4#
PCIE_CLKREQ5#
R250
10K-5%-1/16W-0402
R624
10K-5%-1/16W-0402
R249
10K-5%-1/16W-0402
GPIO21
GPIO19
R292
10K-5%-1/16W-0402
R636
10K-5%-1/16W-0402
WLAN
3G CARD
PCIE LAN
HDD I/F
ODD I/F
U43B
6019B0745601
BD82HM55 FCBGA 1071P INTEL
PCI-E*
SMBus
Controller Link
PEG
From Clk BUFFER
Clock Flex
C723
C726
C420
C424
C431
C435
PCIE_TXN1_C
PCIE_TXP1_C
PCIE_TXN2_C
PCIE_TXP2_C
PCIE_TXN3_C
PCIE_TXP3_C
SMB_CLK_3A
SMB_DATA_3A
PCH_SML1#
PCH_SML2#
SMB2_CLK
SMB2_DATA
PCH_SML1CLK
PCH_SML1DATA
CL_CLK1
CL_DATA1
CL_RST1#
PEX_CLKREQ#
CLK_PCIE_VGA#
CLK_PCIE_VGA
CLK_EXP_N
CLK_EXP_P
CLK_DP_N
CLK_DP_P
CLK_BUF_EXP#
CLK_BUF_EXP
CLK_BUF_BCLK#
CLK_BUF_BCLK
CLK_BUF_DREF#
CLK_BUF_DREF
CLK_BUF_SATA#
CLK_BUF_SATA
CLK_14M_ICH
CLK_PCI_FB
XTAL25_IN
XTAL25_OUT
R337
90.9 1% 1/16 0402
CLK_R_48M
R726
22-5%-1/16W-0402
CLK_48M
PCIE_CLKREQ0#
PCIE_CLKREQ1#
PCIE_CLKREQ2#
PCIE_CLKREQ3#
PCIE_CLKREQ4#
PCIE_CLKREQ5#
XTAL25_IN
XTAL25_OUT
C765
18pF 50V 5% 0402 NPO
C764
18pF 50V 5% 0402 NPO
R722
20K-N/A/1/1-%-1/16W-0402
25MHz 20ppm 12pF 3.2X2.5 HARMONY X5
PCIECLKREQ# 0,3,4,5,6,7 --- 3VA plane
PCIECLKREQ# 1,2 --- 3VS plane
R342
2.2K-5%-1/16W-0402
R341
2.2K-5%-1/16W-0402
R333
2.2K-5%-1/16W-0402
R334
2.2K-5%-1/16W-0402
5VS
SMB_CLK
SMB_DATA
Q71
SSM3K17FU 50V 100mA SC70
Q73
SSM3K17FU 50V 100mA SC70
R335
0-5%-1/16W-0402
R332
0-5%-1/16W-0402
SMB_CLK_3A_R
SMB_DATA_3A_R
INVENTEC
BAP/BXP30
PCH(HDA,JTAG,SATA)
SIZE Custom
CODE CS
DOC.NUMBER CS-131
REV X01
SHEET 18 of 41
CHANGE by IEC
DATE Monday, May 24, 2010

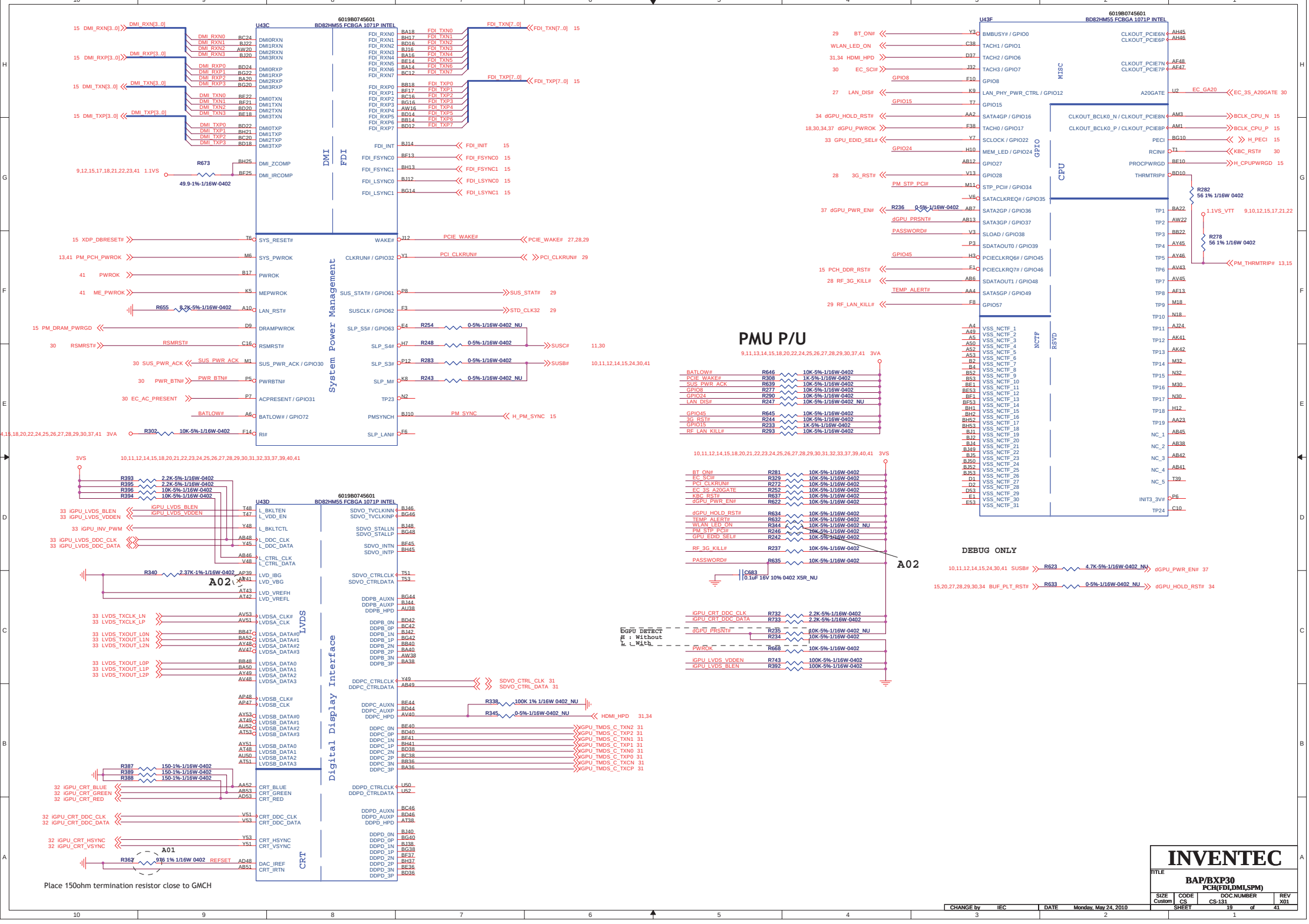

INVENTEC

TITLE

BAP/BXP30

PCH(FDI,DMI,SPM)

SIZE	CODE	DOC.NUMBER	REV
Custom	CS	CS-131	X01

SHEET 19 of 41

CHANGE by	IEC	DATE	Monday, May 24, 2010

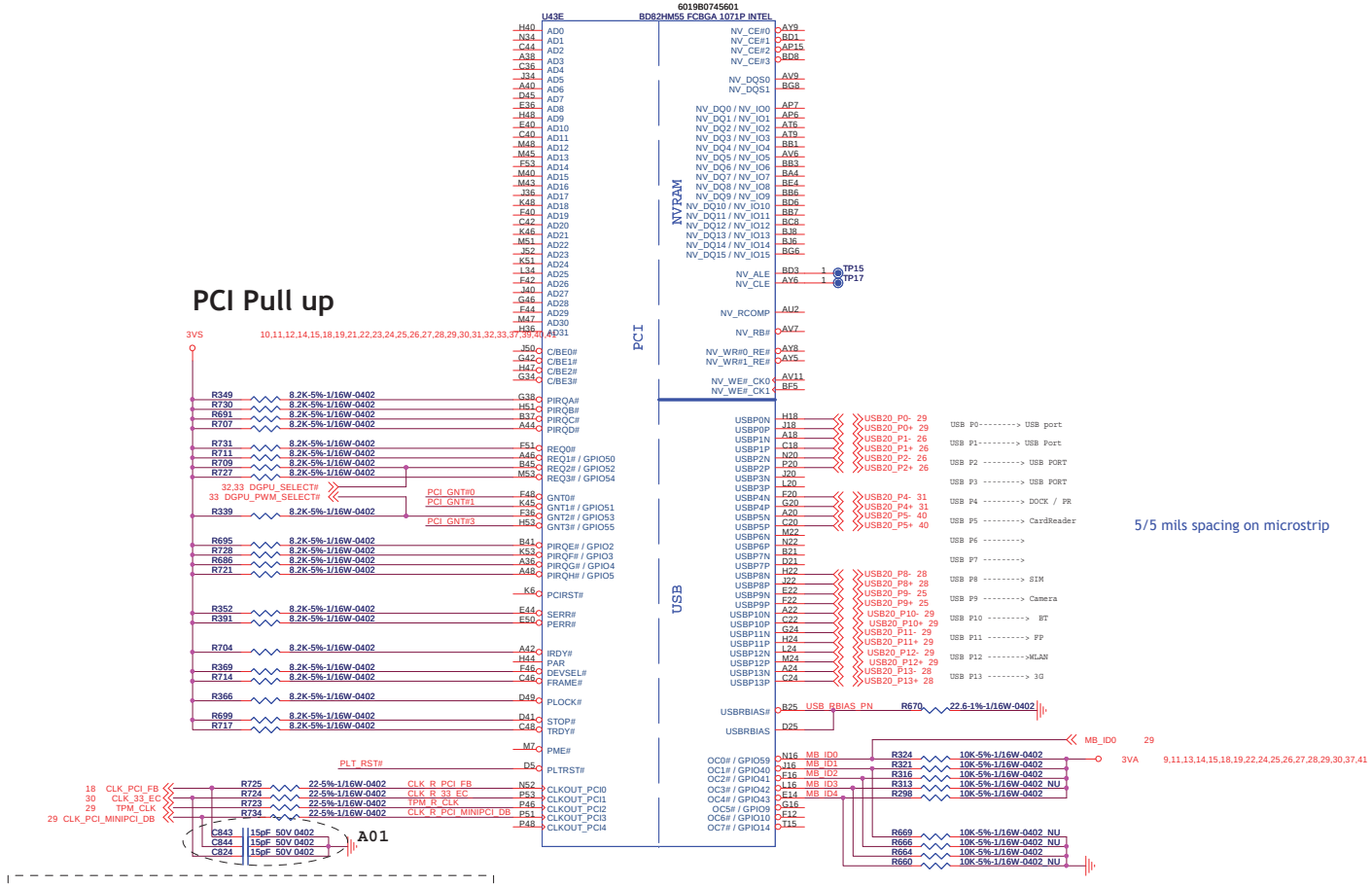

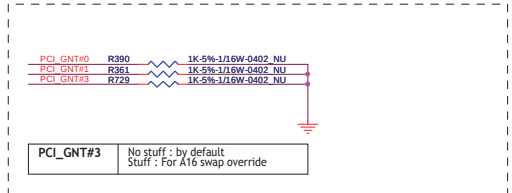

PCI_GNT#3	No stuff : by default Stuff : For A16 swap override

PCI_GNT#0	PCI_GNT#1	
0	0	LPC
Floating	0	PCI
Floating	Floating	SPI

BIOS type select

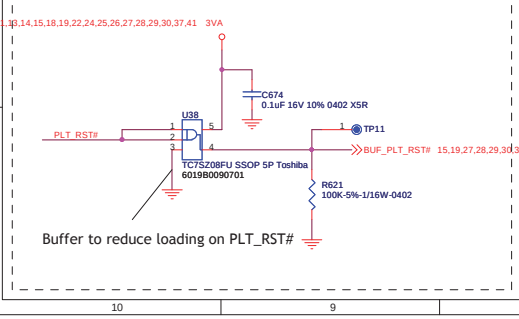

BIOS ID setting

Project	MB_ID4	MB_ID3	MB_ID2	MB_ID1	MB_ID0
BAP10 (UMA)	1	1	1	1	1
BXP10 (UMA)	1	1	1	1	0
BAP30 (UMA)	1	1	1	0	1
BXP30 (UMA)	1	1	1	0	0
BAD50 (UMA)	1	1	0	1	1
BXD50 (UMA)	1	1	0	1	0
SJM40 (UMA)	1	1	0	0	1
SJM40 (dGPU)	1	1	0	0	0
BAP30 (dGPU)	1	0	1	1	1
BXP30 (dGPU)	1	0	1	1	0
BAD50 (dGPU)	1	0	1	0	1
BXD50 (dGPU)	1	0	1	0	0
SJM40 (dGPU optimus)	1	0	0	1	1
BAP30 (dGPU optimus)	1	0	0	0	1
BXP30 (dGPU optimus)	1	0	0	0	0

INVENTEC

TITLE
BAP/BXP30
PCH(USB, PCI)

SIZE	CODE	DOC.NUMBER	REV
Custom	CS	CS-131	X01

SHEET 20 of 41

CHANGE by	IEC	DATE	Monday, May 24, 2010

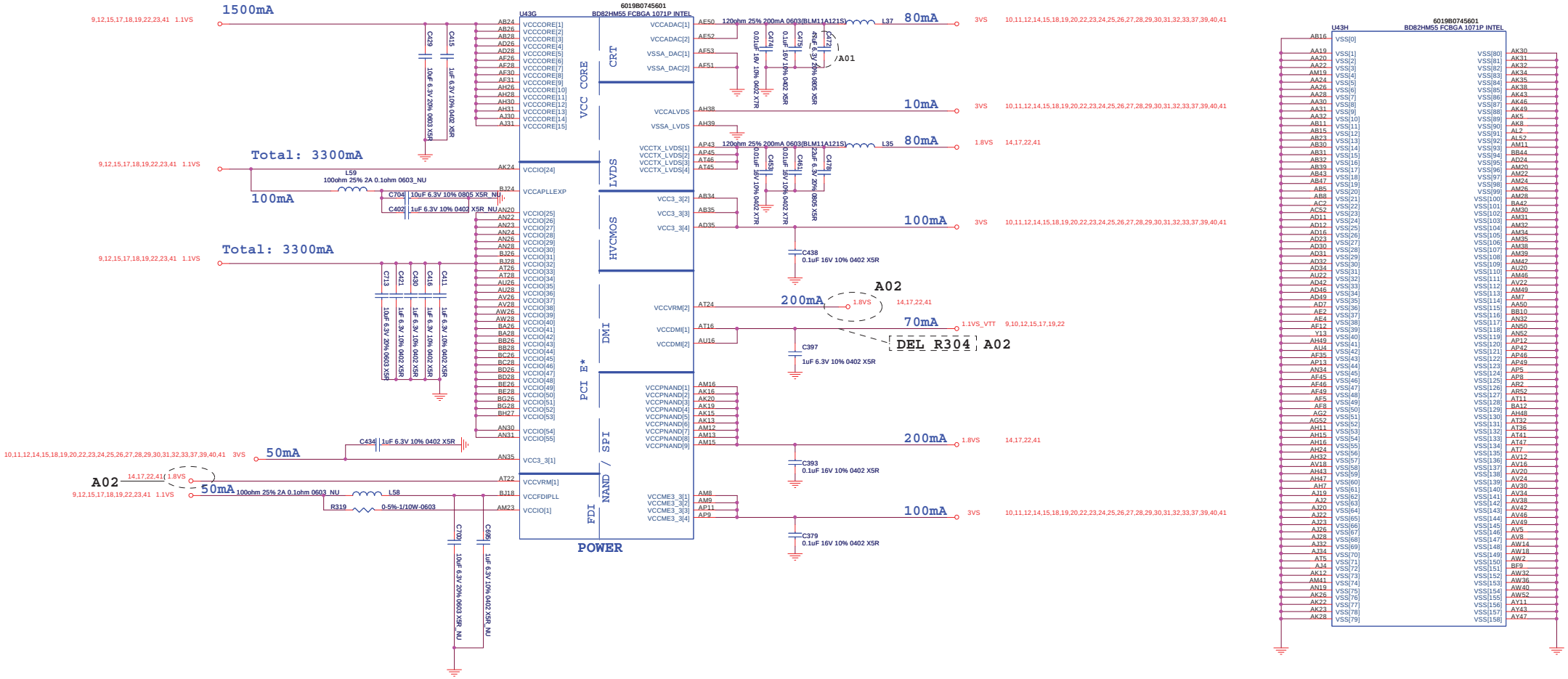

CHANGE by	IEC	DATE	Monday, May 24, 2010

INVENTEC

TITLE

BAP/BXP30

PCH Power 1

SIZE	CODE	DOC.NUMBER	REV
Custom	CS	CS-131	X01

SHEET 21 of 41

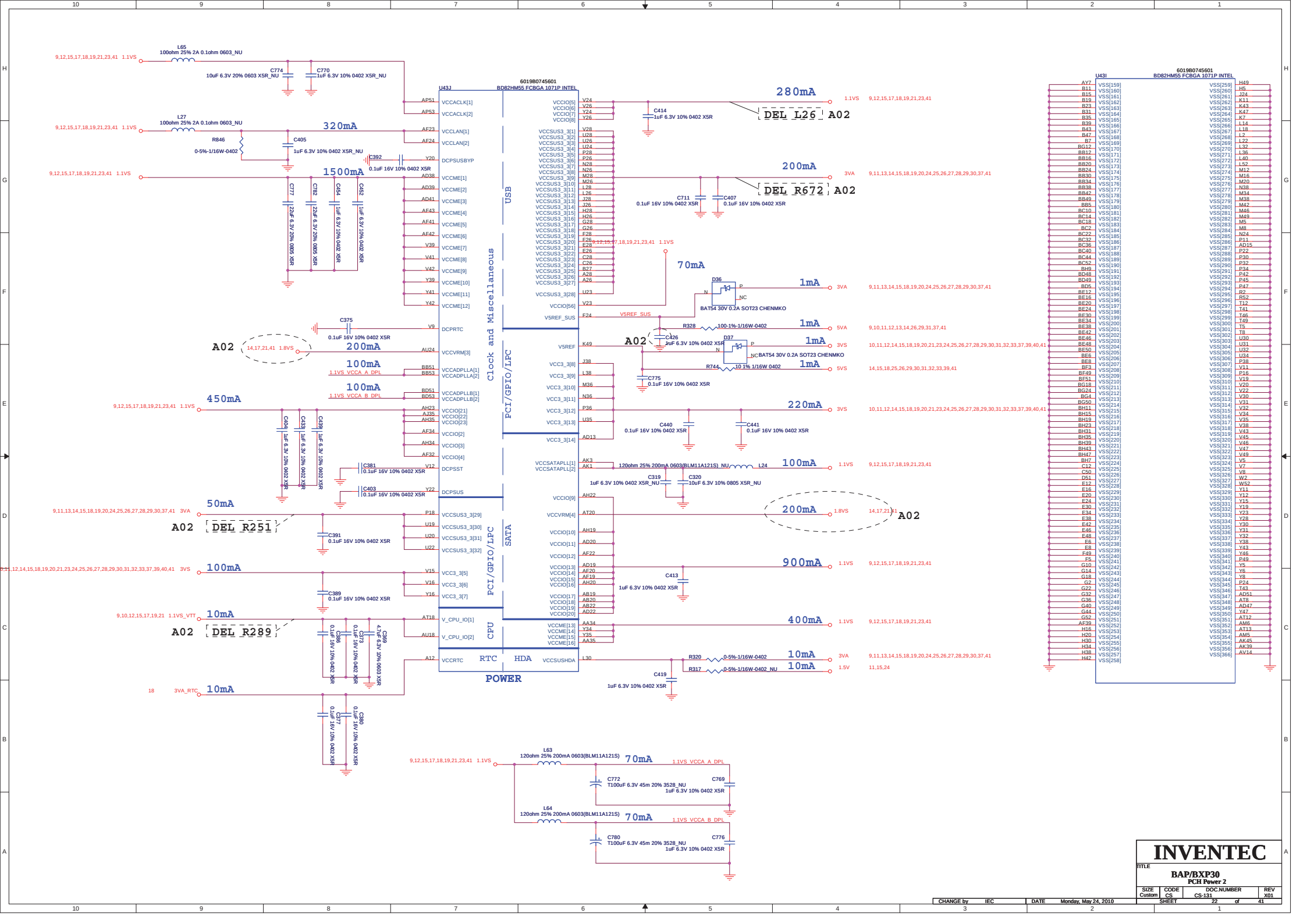
U43J
6019B0745601
BD82HM55 FCBGA 1071P INTEL
Clock and Miscellaneous
USB
PCI/GPIO/LPC
SATA
CPU
RTC
HDA
POWER
U43I
6019B0745601
BD82HM55 FCBGA 1071P INTEL
L65
100ohm 25% 2A 0.1ohm 0603_NU
L27
100ohm 25% 2A 0.1ohm 0603_NU
R846
0-5%-1/16W-0402
320mA
1500mA
200mA
100mA
450mA
50mA
10mA
280mA
70mA
1mA
220mA
900mA
400mA
DEL L26 A02
DEL R672 A02
DEL R251
DEL R289
A02
D36
BAT54 30V 0.2A SOT23 CHENMKO
D37
NC BAT54 30V 0.2A SOT23 CHENMKO
R328
100-1%-1/16W-0402
R744
10 1% 1/16W 0402
L24
120ohm 25% 200mA 0603(BLM11A121S)_NU
R320
0-5%-1/16W-0402
R317
0-5%-1/16W-0402_NU
L63
120ohm 25% 200mA 0603(BLM11A121S)
L64
120ohm 25% 200mA 0603(BLM11A121S)
C772
T100uF 6.3V 45m 20% 3528_NU
C769
1uF 6.3V 10% 0402 X5R
C780
T100uF 6.3V 45m 20% 3528_NU
C776
1uF 6.3V 10% 0402 X5R
INVENTEC
TITLE
BAP/BXP30
PCH Power 2
SIZE Custom
CODE CS
DOC.NUMBER CS-131
REV X01
SHEET 22 of 41
CHANGE by IEC
DATE Monday, May 24, 2010

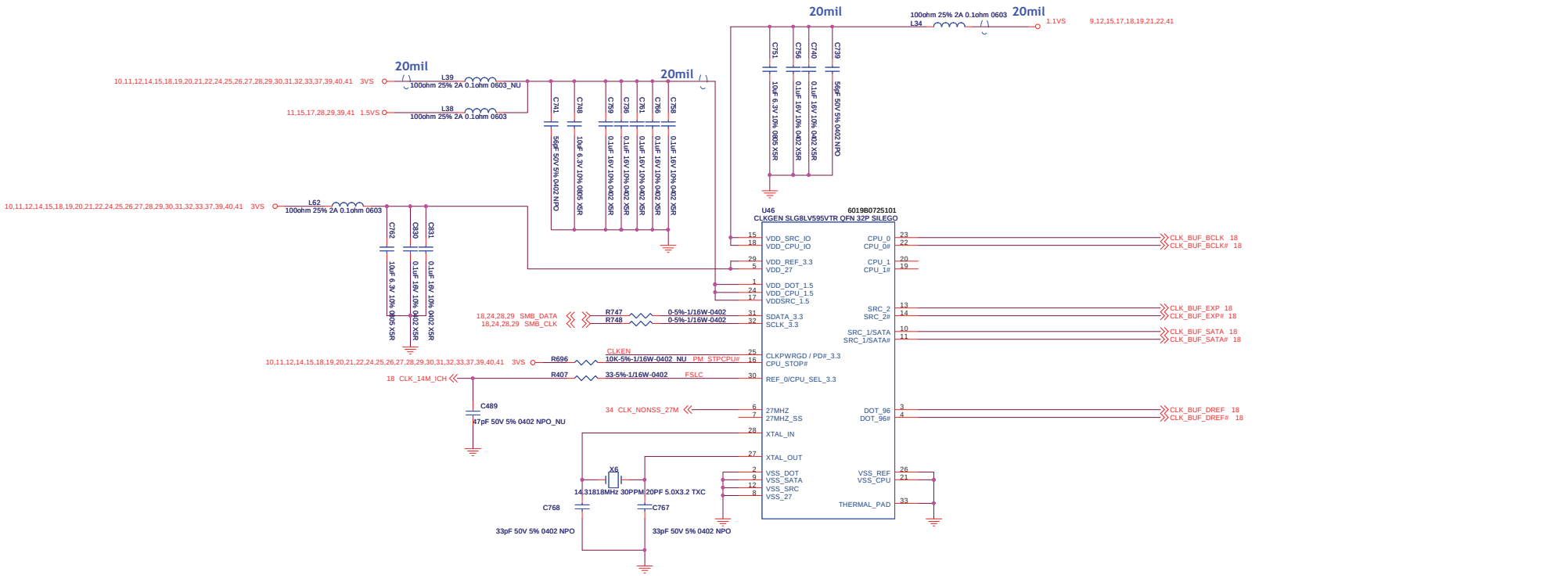

FSLC = 0 , 133 MHz - - >DEFAULT
FSLC = 1, 100 MHz

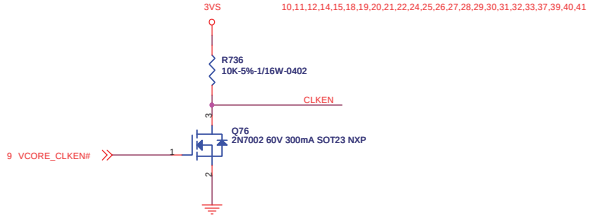

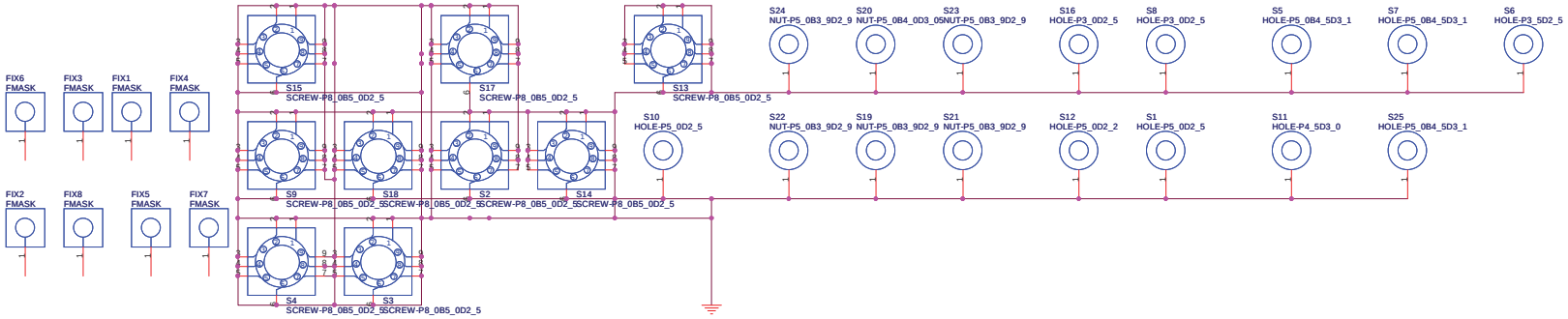

INVENTEC					
TITLE	BAP/BXP30 Clock Generator				
SIZE Custom	CODE CS	DOC.NUMBER CS-131			REV X01
CHANGE by IEC	DATE Monday, May 24, 2010	SHEET 23 of 41			

SO-DIMM0

SO-DIMM1

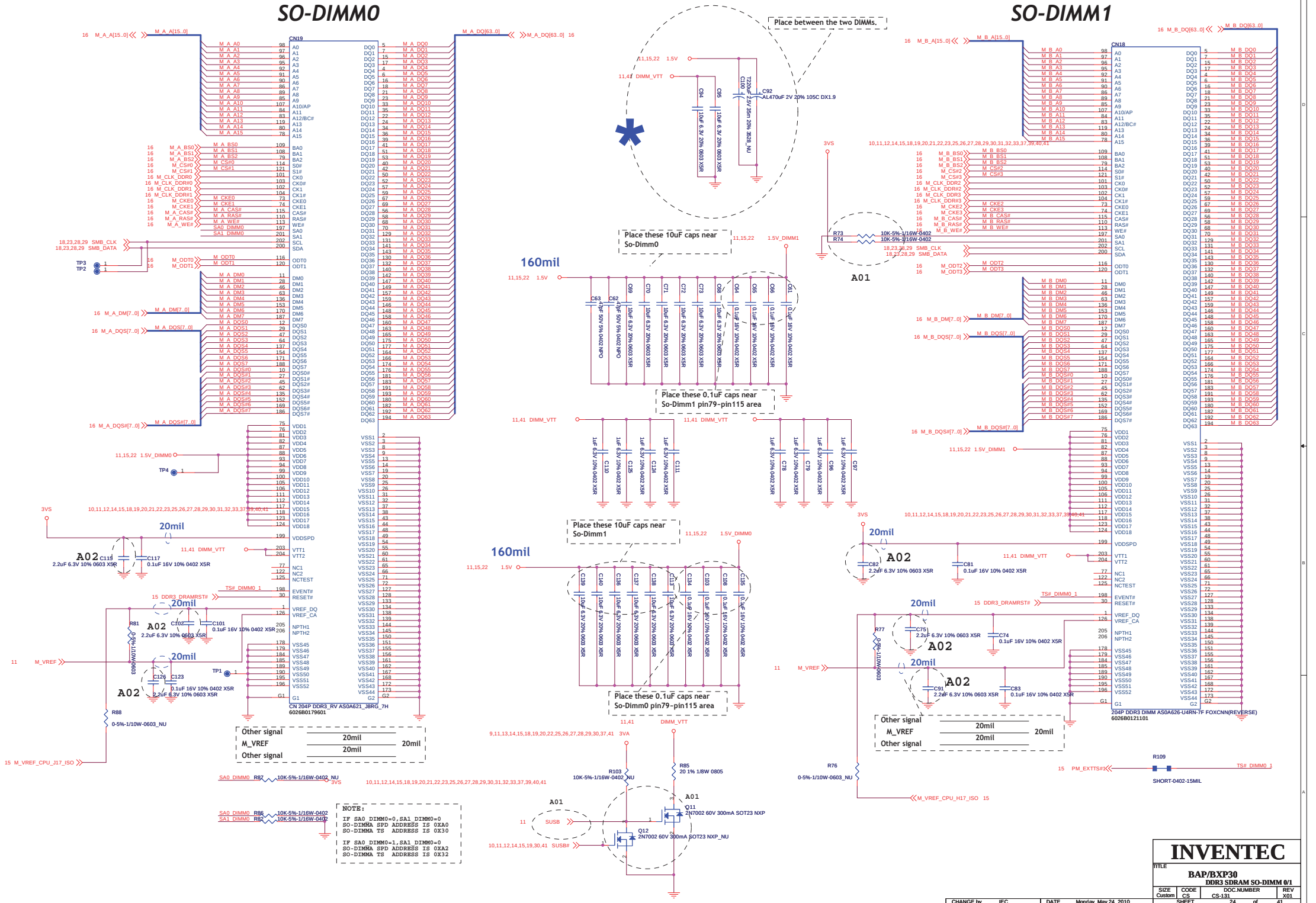

INVENTEC			
TITLE	BAP/BXP30 DDR3 SDRAM SO-DIMM 0/1		
SIZE Custom	CODE CS	DOC.NUMBER CS-131	REV X01
CHANGE by IEC	DATE Monday, May 24, 2010	SHEET 24 of 41	

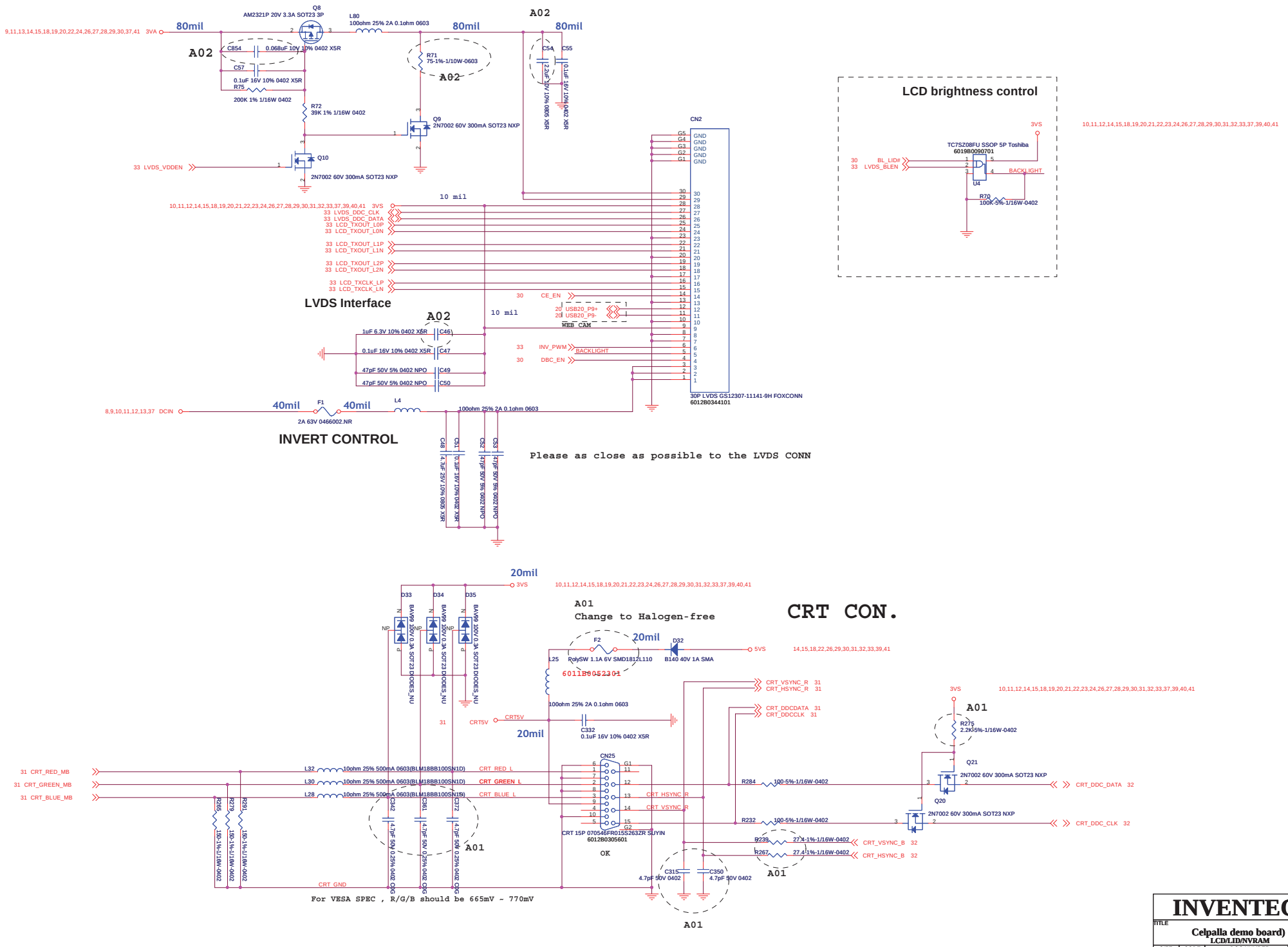
LVDS Interface
INVERT CONTROL
LCD brightness control
CRT CON.
Please as close as possible to the LVDS CONN
For VESA SPEC , R/G/B should be 665mV ~ 770mV
Change to Halogen-free
30P LVDS GS12307-11141-9H FOXCONN
6012B0344101
CRT 15P 070546FR015S263ZR SUYIN
6012B0305601
6011B0052301
AM2321P 20V 3.3A SOT23 3P
2N7002 60V 300mA SOT23 NXP
TC7SZ08FU SSOP 5P Toshiba
6019B0090701
B140 40V 1A SMA
BAV99 100V 0.3A SOT23 DIODES_NU
RolySW 1.1A 6V SMD1812L110
INVENTEC
Celpalla demo board)
LCD/LID/NVRAM
CS-131
Monday, May 24, 2010
IEC
25 of 41

USB

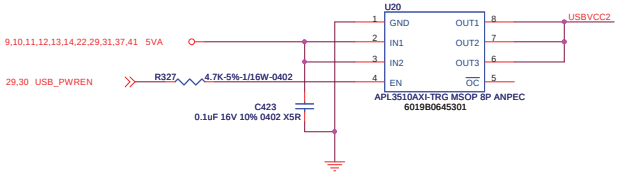

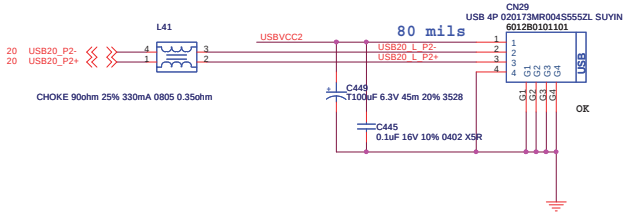

move to bottom side

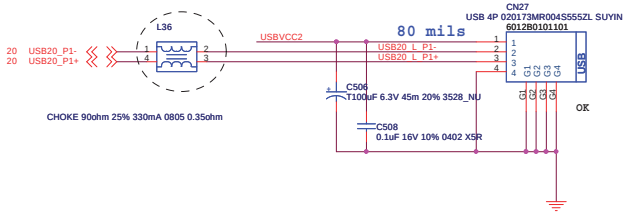

HALL Switch

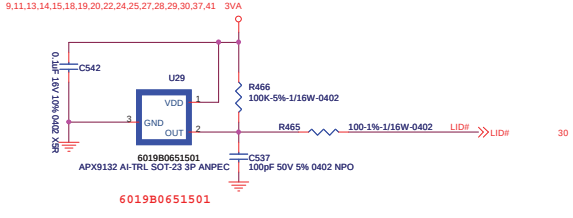

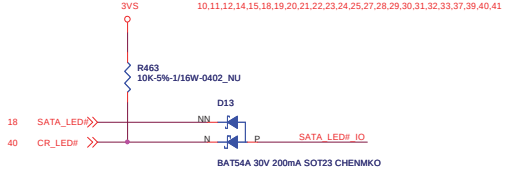

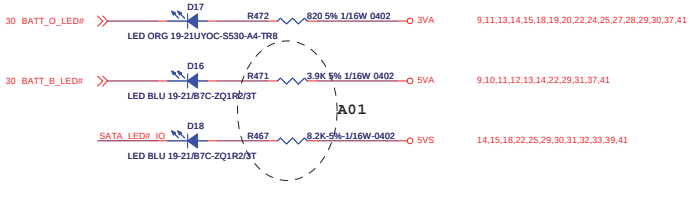

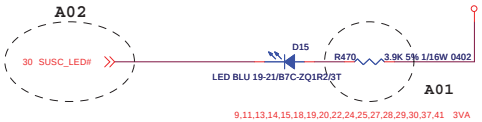

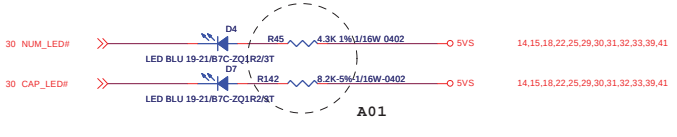

REMOTE thermal sensor
Place near the hottest spot area under Palm-rest

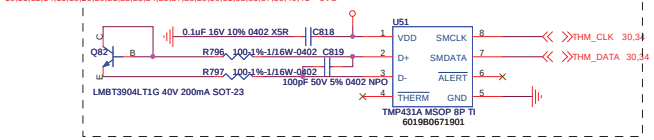

INVENTEC			
TITLE BAP/BXP30 HDD/DAUGHTER CONNECTOR			
SIZE Custom	CODE CS	DOC.NUMBER CS-131	REV X01
		SHEET 26 of 41	

CHANGE by IEC DATE Monday, May 24, 2010

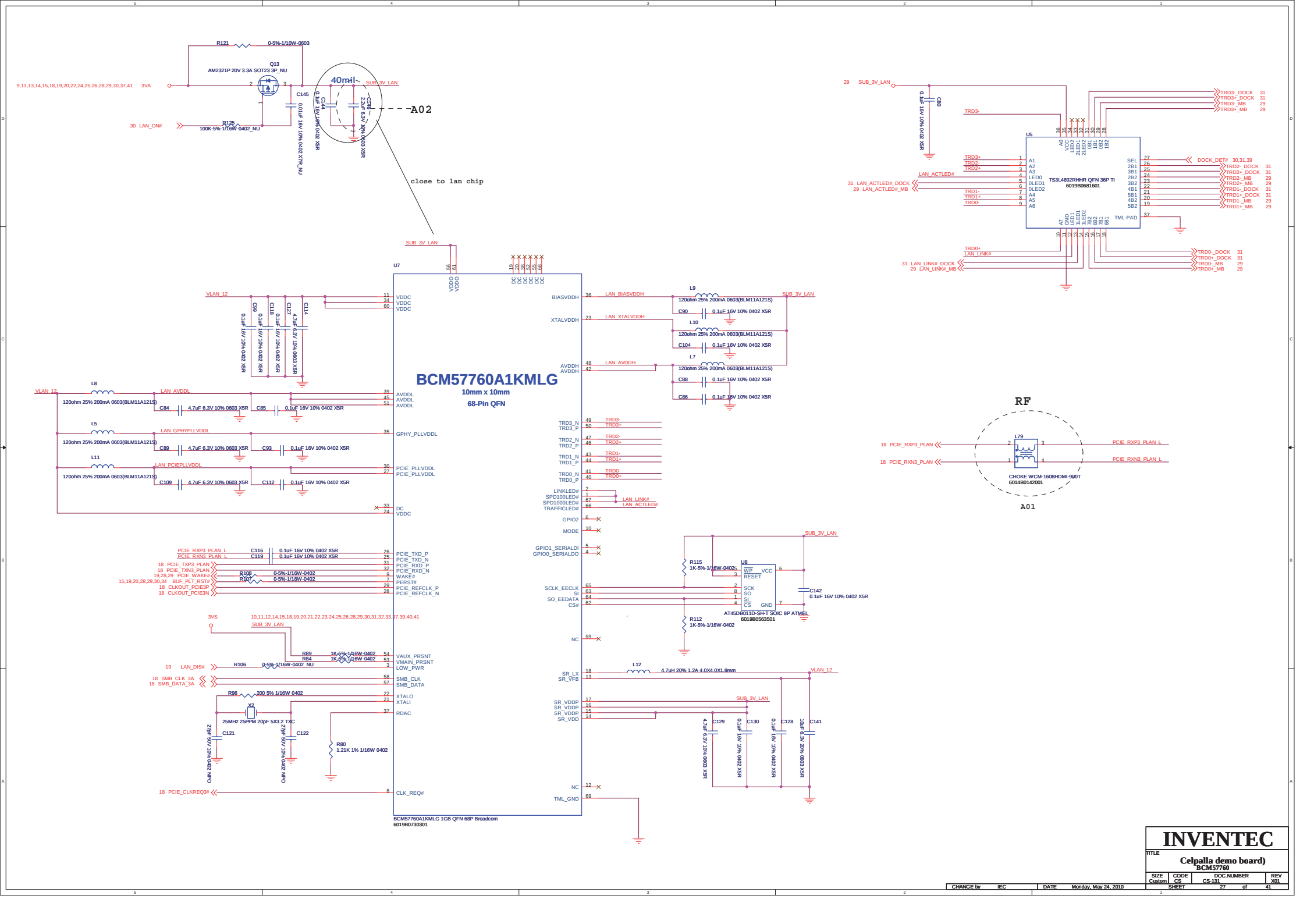
R121 0-5%-1/10W-0603
Q13
AM2321P 20V 3.3A SOT23 3P_NU
9,11,13,14,15,18,19,20,22,24,25,26,28,29,30,37,41 3VA
30 LAN_ON#
R125
100K-5%-1/16W-0402_NU
C145
0.01uF 16V 10% 0402 X7R_NU
C114
0.1uF 16V 10% 0402 X5R
C126
2.2uF 6.3V 10% 0603 X5R
40mil
SUB_3V_LAN
A02
close to lan chip
29 SUB_3V_LAN
C90
0.1uF 16V 10% 0402 X5R
U5
TS3L4892RHHR QFN 36P TI
6019B0681601
TRD3-
TRD3+
TRD2-
TRD2+
LAN_ACTLED#
31 LAN_ACTLED#_DOCK
29 LAN_ACTLED#_MB
TRD1-
TRD1+
TRD0-
TRD0+
LAN_LINK#
31 LAN_LINK#_DOCK
29 LAN_LINK#_MB
DOCK_DET# 30,31,39
TRD3-_DOCK 31
TRD3+_DOCK 31
TRD3-_MB 29
TRD3+_MB 29
TRD2-_DOCK 31
TRD2+_DOCK 31
TRD2-_MB 29
TRD2+_MB 29
TRD1-_DOCK 31
TRD1+_DOCK 31
TRD1-_MB 29
TRD1+_MB 29
TRD0-_DOCK 31
TRD0+_DOCK 31
TRD0-_MB 29
TRD0+_MB 29
TML-PAD
U7
BCM57760A1KMLG
10mm x 10mm
68-Pin QFN
BCM57760A1KMLG 1GB QFN 68P Broadcom
6019B0730301
VLAN_12
C99 0.1uF 16V 10% 0402 X5R
C118 0.1uF 16V 10% 0402 X5R
C127 0.1uF 16V 10% 0402 X5R
C114 4.7uF 6.3V 10% 0603 X5R
L8
120ohm 25% 200mA 0603(BLM11A121S)
LAN_AVDDL
C84 4.7uF 6.3V 10% 0603 X5R
C85 0.1uF 16V 10% 0402 X5R
L5
LAN_GPHYPLLVDDL
C89 4.7uF 6.3V 10% 0603 X5R
C93 0.1uF 16V 10% 0402 X5R
L11
LAN_PCIEPLLVDDL
C109 4.7uF 6.3V 10% 0603 X5R
C112 0.1uF 16V 10% 0402 X5R
BIASVDDH
LAN_BIASVDDH
L9
C90 0.1uF 16V 10% 0402 X5R
XTALVDDH
LAN_XTALVDDH
L10
C104 0.1uF 16V 10% 0402 X5R
AVDDH
LAN_AVDDH
L7
C88 0.1uF 16V 10% 0402 X5R
C86 0.1uF 16V 10% 0402 X5R
TRD3_N
TRD3_P
TRD2_N
TRD2_P
TRD1_N
TRD1_P
TRD0_N
TRD0_P
LINKLED#
SPD100LED#
SPD1000LED#
TRAFFICLED#
GPIO2
MODE
GPIO1_SERIALDI
GPIO0_SERIALDO
SCLK_EECLK
SO_EEDATA
CS#
NC
SR_LX
SR_VFB
SR_VDDP
SR_VDD
TML_GND
PCIE_RXP3_PLAN_L C116 0.1uF 16V 10% 0402 X5R
PCIE_RXN3_PLAN_L C119 0.1uF 16V 10% 0402 X5R
18 PCIE_TXP3_PLAN
18 PCIE_TXN3_PLAN
19,28,29 PCIE_WAKE#
15,19,20,28,29,30,34 BUF_PLT_RST#
18 CLKOUT_PCIE3P
18 CLKOUT_PCIE3N
R108 0-5%-1/16W-0402
R107 0-5%-1/16W-0402
3VS
10,11,12,14,15,18,19,20,21,22,23,24,25,26,28,29,30,31,32,33,37,39,40,41
SUB_3V_LAN
R89 1K-5%-1/16W-0402
R84 1K-5%-1/16W-0402
19 LAN_DIS#
R106 0-5%-1/16W-0402_NU
18 SMB_CLK_3A
18 SMB_DATA_3A
R96 200 5% 1/16W 0402
X2
25MHz 25PPM 20pF 5X3.2 TXC
C121 27pF 50V 10% 0402 NPO
C122 27pF 50V 10% 0402 NPO
R80
1.21K 1% 1/16W 0402
18 PCIE_CLKREQ3#
VAUX_PRSNT
VMAIN_PRSNT
LOW_PWR
SMB_CLK
SMB_DATA
XTALO
XTALI
RDAC
CLK_REQ#
R115
1K-5%-1/16W-0402
U8
AT45DB011D-SH-T SOIC 8P ATMEL
6019B0563501
C142
0.1uF 16V 10% 0402 X5R
R112
1K-5%-1/16W-0402
L12
4.7uH 20% 1.2A 4.0X4.0X1.8mm
VLAN_12
C129 4.7uF 6.3V 10% 0603 X5R
C130 0.1uF 16V 10% 0402 X5R
C128 0.1uF 16V 10% 0402 X5R
C141 10uF 6.3V 20% 0603 X5R
RF
L79
CHOKE WCM-1608HDMI-900T
6014B0142001
18 PCIE_RXP3_PLAN
18 PCIE_RXN3_PLAN
PCIE_RXP3_PLAN_L
PCIE_RXN3_PLAN_L
A01
INVENTEC
TITLE
Celpalla demo board)
BCM57760
SIZE Custom
CODE CS
DOC.NUMBER CS-131
REV X01
CHANGE by IEC
DATE Monday, May 24, 2010
SHEET 27 of 41

On Chip 5V to 3.3V regulator. No external regulator required
On-Chip power MOSFETs for supplying flash media card power.

PCIE Mini Card for 3G

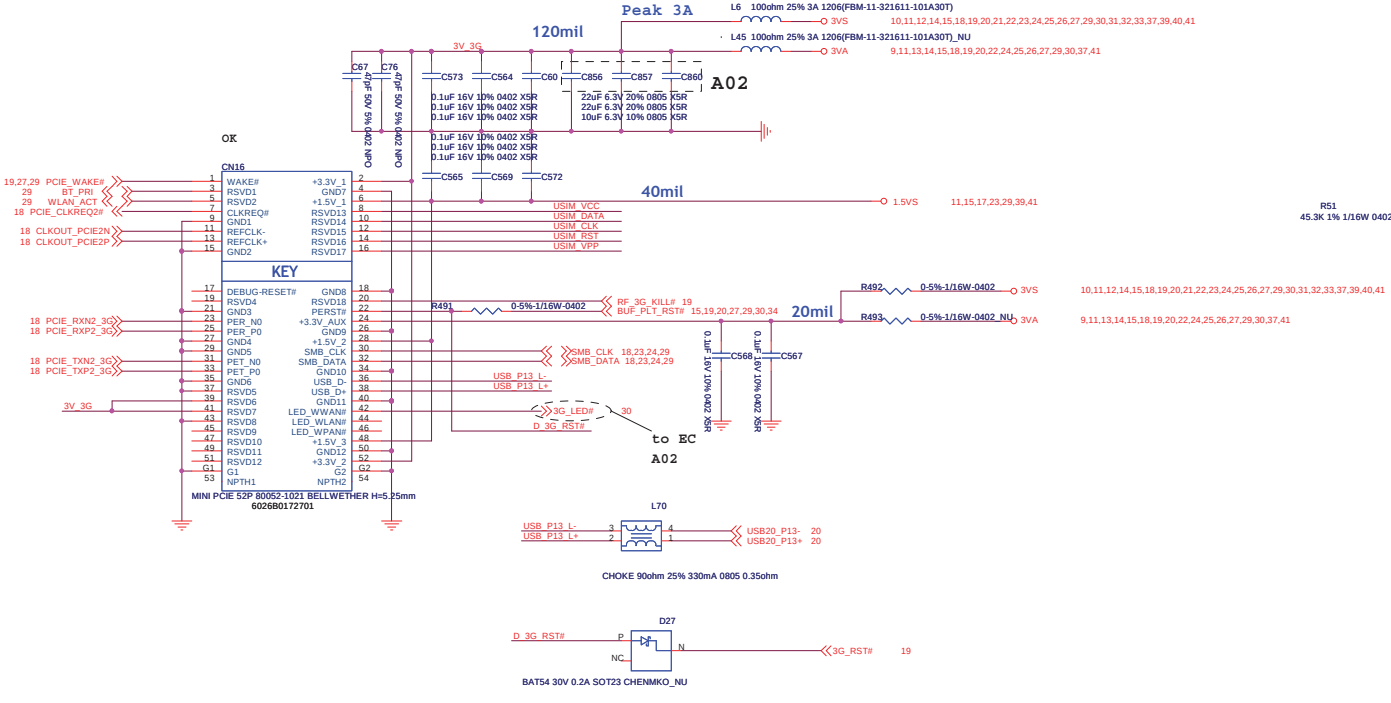

SIM CARD slot

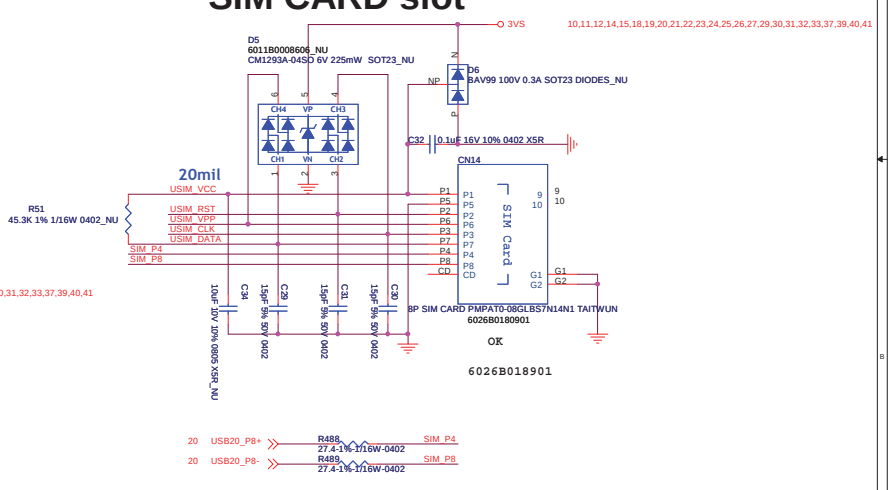

INVENTEC			
TITLE BAP/BXP30 WLAN/3G			
SIZE Custom	CODE CS	DOC.NUMBER CS-131	REV X01
CHANGE by IEC	DATE Monday, May 24, 2010	SHEET 28 of 41	

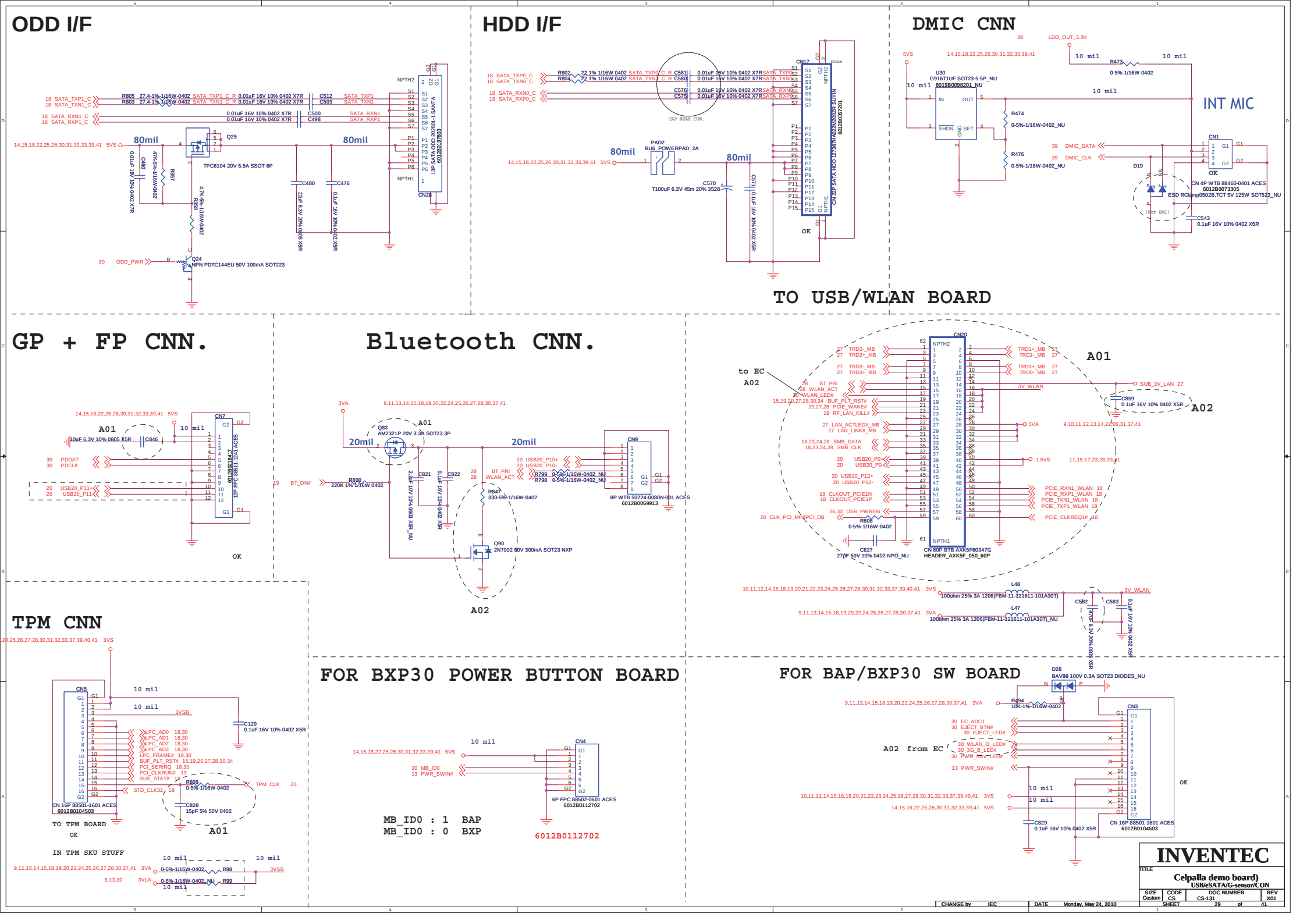
ODD I/F
HDD I/F
DMIC CNN
TO USB/WLAN BOARD
GP + FP CNN.
Bluetooth CNN.
TPM CNN
FOR BXP30 POWER BUTTON BOARD
FOR BAP/BXP30 SW BOARD
INT MIC
TPC6104 20V 5.5A SSOT 6P
NPN PDTC144EU 50V 100mA SOT223
CN 22P SATA HDD 12785-HA022H022R SUYIN
CN 13P SATA ODD 202500-1 SANTA
CN 4P WTB 88460-0401 ACES
ESD RClamp0502B.TCT 5V 125W SOT523_NU
CN 60P BTB AXK5F60347G HEADER_AXK5F_050_60P
8P WTB 50224-0080N-001 ACES
CN 16P 88501-1601 ACES
6P FPC 88502-0601 ACES
TO TPM BOARD
IN TPM SKU STUFF
MB_ID0 : 1 BAP
MB_ID0 : 0 BXP
6012B0112702
A02 from EC
INVENTEC
Celpalla demo board)
USB/eSATA/G-sensor/CON
CS-131
Monday, May 24, 2010
29 of 41

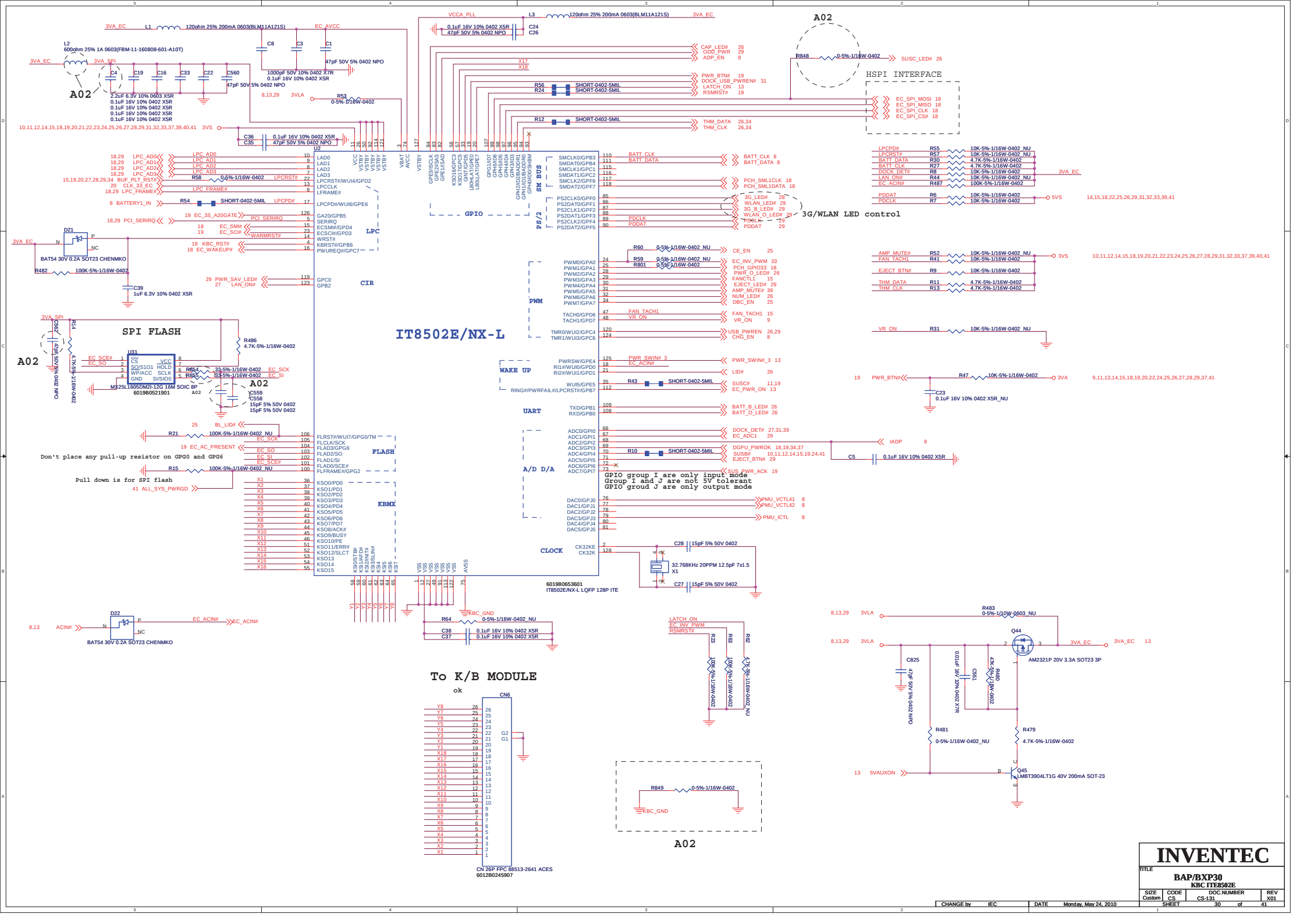
IT8502E/NX-L
6019B0653601
IT8502E/NX-L LQFP 128P ITE
SPI FLASH
MX25L16050MZI-12G 16M SOIC 8P
6019B0521901
HSPI INTERFACE
3G/WLAN LED control
To K/B MODULE
ok
CN 26P FPC 88513-2641 ACES
6012B0245907
BAT54 30V 0.2A SOT23 CHENMKO
AM2321P 20V 3.3A SOT23 3P
LMBT3904LT1G 40V 200mA SOT-23
Don't place any pull-up resistor on GPG0 and GPG6
Pull down is for SPI flash
GPIO group I are only input mode
Group I and J are not 5V tolerant
GPIO groud J are only output mode
A02
INVENTEC
BAP/BXP30
KBC ITE8502E
SIZE Custom
CODE CS
DOC.NUMBER CS-131
REV X01
CHANGE by IEC
DATE Monday, May 24, 2010
SHEET 30 of 41

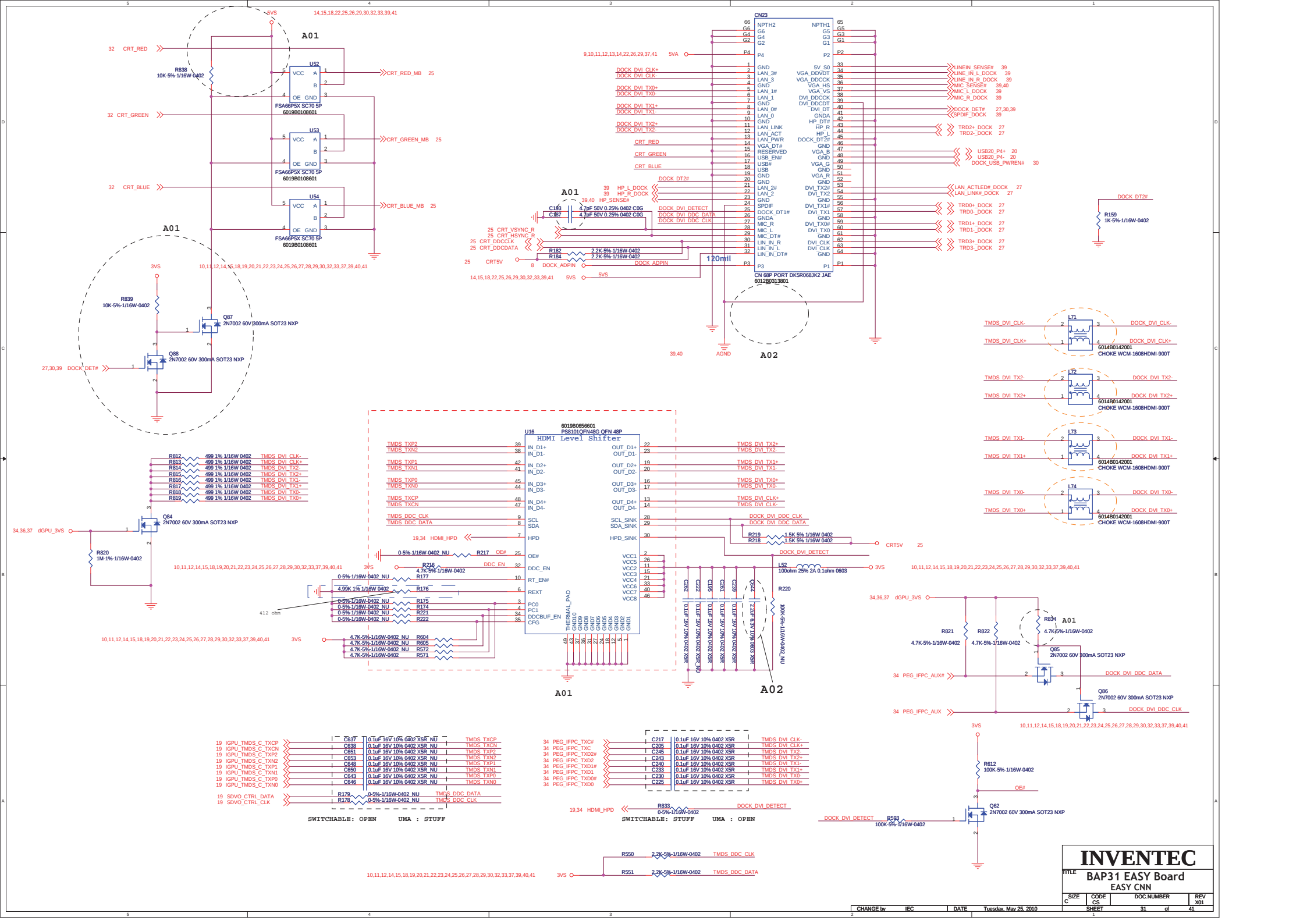
A01
A02
U52
U53
U54
FSA66P5X SC70 5P
6019B0108601
R838
10K-5%-1/16W-0402
CRT_RED_MB
CRT_GREEN_MB
CRT_BLUE_MB
R839
10K-5%-1/16W-0402
Q87
2N7002 60V 300mA SOT23 NXP
Q88
2N7002 60V 300mA SOT23 NXP
CN23
CN 68P PORT DK5R068JK2 JAE
6012B0313801
120mil
R159
1K-5%-1/16W-0402
L71
L72
L73
L74
6014B0142001
CHOKE WCM-1608HDMI-900T
U16
6019B0656601
PS8101QFN48G QFN 48P
HDMI Level Shifter
R812 499 1% 1/16W 0402 TMDS_DVI_CLK-
R813 499 1% 1/16W 0402 TMDS_DVI_CLK+
R814 499 1% 1/16W 0402 TMDS_DVI_TX2-
R815 499 1% 1/16W 0402 TMDS_DVI_TX2+
R816 499 1% 1/16W 0402 TMDS_DVI_TX1-
R817 499 1% 1/16W 0402 TMDS_DVI_TX1+
R818 499 1% 1/16W 0402 TMDS_DVI_TX0-
R819 499 1% 1/16W 0402 TMDS_DVI_TX0+
Q84
2N7002 60V 300mA SOT23 NXP
R820
1M-1%-1/16W-0402
R217 0-5%-1/16W-0402_NU
R216 4.7K-5%-1/16W-0402
R177 0-5%-1/16W-0402_NU
R176 4.99K 1% 1/16W 0402
R175 0-5%-1/16W-0402_NU
R174 0-5%-1/16W-0402_NU
R221 0-5%-1/16W-0402_NU
R222 0-5%-1/16W-0402_NU
412 ohm
R604 4.7K-5%-1/16W-0402_NU
R605 4.7K-5%-1/16W-0402_NU
R572 4.7K-5%-1/16W-0402_NU
R571 4.7K-5%-1/16W-0402
R219 1.5K 5% 1/16W 0402
R218 1.5K 5% 1/16W 0402
L52
100ohm 25% 2A 0.1ohm 0603
R220
100K-5%-1/16W-0402_NU
R821 4.7K-5%-1/16W-0402
R822 4.7K-5%-1/16W-0402
R834 4.7K-5%-1/16W-0402
Q85
2N7002 60V 300mA SOT23 NXP
Q86
2N7002 60V 300mA SOT23 NXP
R612
100K-5%-1/16W-0402
Q62
2N7002 60V 300mA SOT23 NXP
R593
100K-5%-1/16W-0402
R550 2.2K-5%-1/16W-0402 TMDS_DDC_CLK
R551 2.2K-5%-1/16W-0402 TMDS_DDC_DATA
SWITCHABLE: OPEN UMA : STUFF
SWITCHABLE: STUFF UMA : OPEN
INVENTEC
TITLE
BAP31 EASY Board
EASY CNN
SIZE C
CODE CS
DOC.NUMBER
REV X01
SHEET 31 of 41
CHANGE by IEC
DATE Tuesday, May 25, 2010

CRT HSYNC/VSYNC SW For Dock

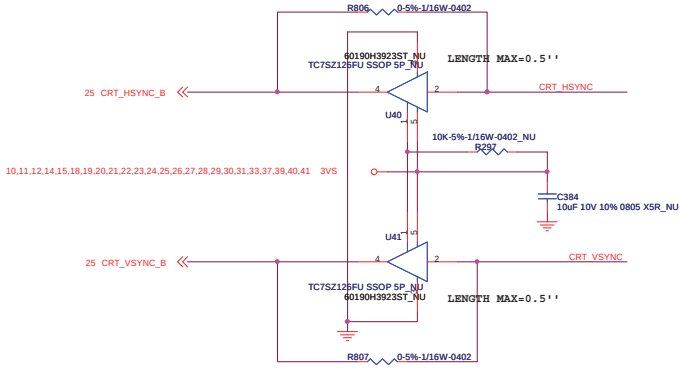

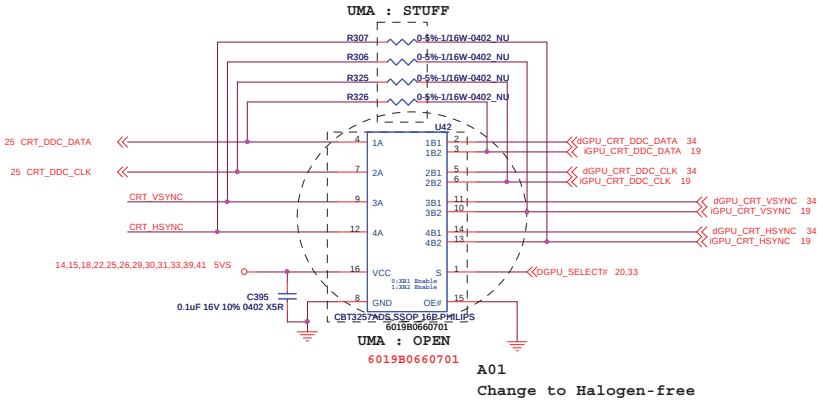

CRT HSYNC/VSYNC/DDC SW

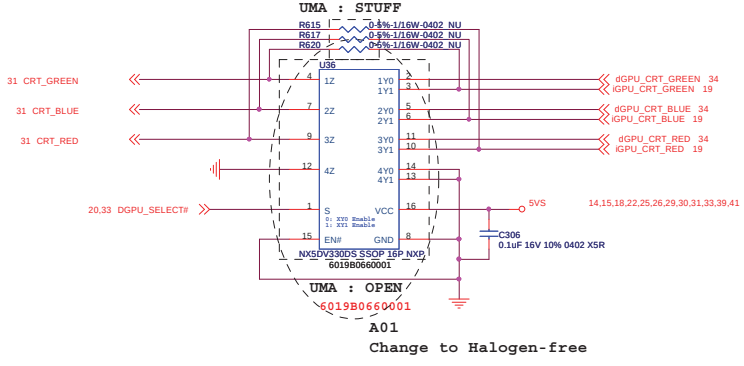

CRT R/G/B SW

Signal	During Reset	After Reset	Description
DGPU_PWR_EN#	High	High	0 : dGPU power switch turned on 1 : power switch turned off
DGPU_PWROK			0 : dGPU power is not stable 1 : dGPU power is stable
DGPU_HOLD_RST#	Low	Low	0 : Keep dGPU in reset 1 : Reset is released
DGPU_SELECT#	High	High	0 : Display switch enabled for dGPU 1 : Display switch enabled for iGPU
HPD_INT#			0 : DVI insertion 1 : No DVI insertion
DGPU_PWM_SELECT#		High	0 : PWM switch enabled for dGPU 1 : PWM switch enabled for iGPU
GPU_EDID_SEL#		High	0 : EDID/DDC switch enabled for dGPU 1 : EDID/DDC switch enabled for iGPU

LVDS SW

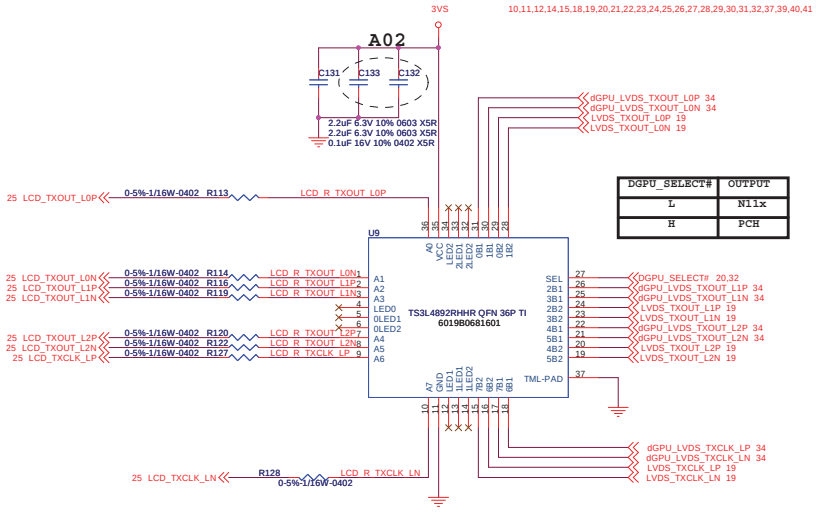

DGPU_SELECT#	OUTPUT
L	N11x
H	PCH

LCD PWM SW

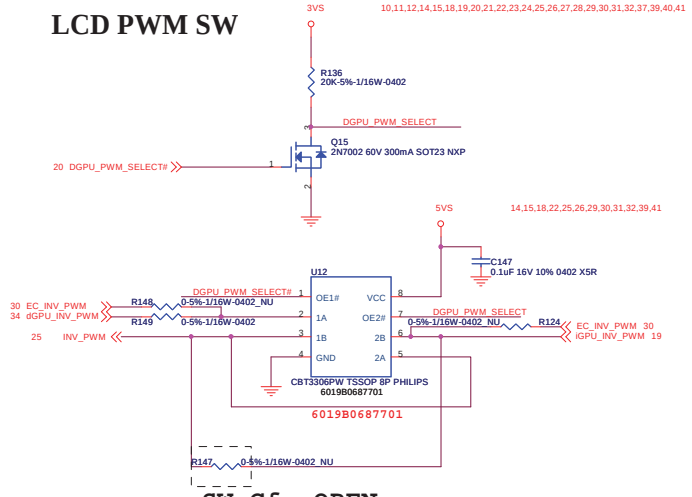

SW Gfx:OPEN
UMA:Stuff

LCD DDC SW

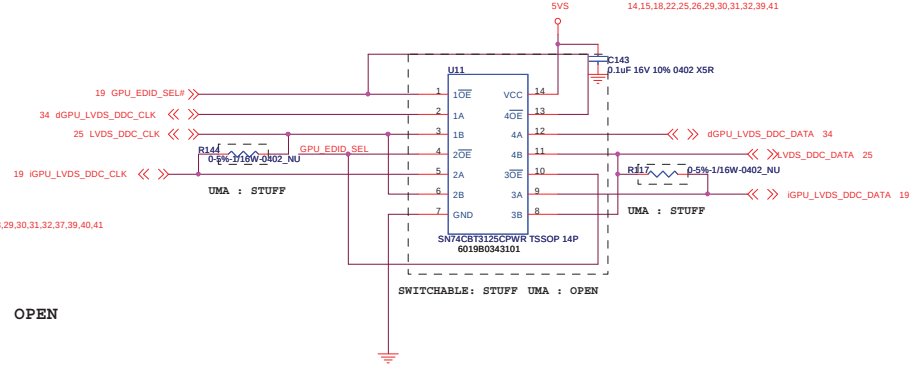

UMA : STUFF

UMA : STUFF

SWITCHABLE: STUFF UMA : OPEN

LVDS_VDDEN	R143	0-5%-1/16W-0402_NU	iGPU_LVDS_VDDEN
LVDS_BLEN	R135	0-5%-1/16W-0402_NU	iGPU_LVDS_BLEN
LVDS_TXOUT_L2P	R104	0-5%-1/16W-0402_NU	LCD_TXOUT_L2P
LVDS_TXOUT_L2N	R105	0-5%-1/16W-0402_NU	LCD_TXOUT_L2N
LVDS_TXOUT_L1P	R101	0-5%-1/16W-0402_NU	LCD_TXOUT_L1P
LVDS_TXOUT_L1N	R102	0-5%-1/16W-0402_NU	LCD_TXOUT_L1N
LVDS_TXOUT_L0P	R97	0-5%-1/16W-0402_NU	LCD_TXOUT_L0P
LVDS_TXOUT_L0N	R100	0-5%-1/16W-0402_NU	LCD_TXOUT_L0N
LVDS_TXCLK_LP	R110	0-5%-1/16W-0402_NU	LCD_TXCLK_LP
LVDS_TXCLK_LN	R111	0-5%-1/16W-0402_NU	LCD_TXCLK_LN

UMA : STUFF

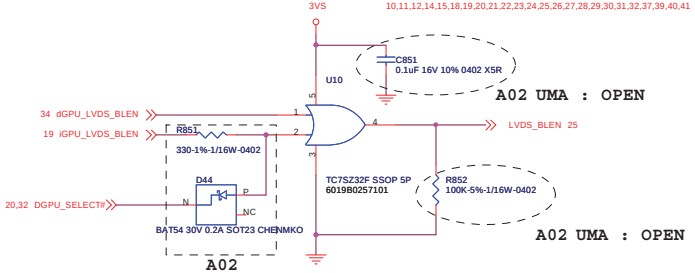

A02
UMA : OPEN

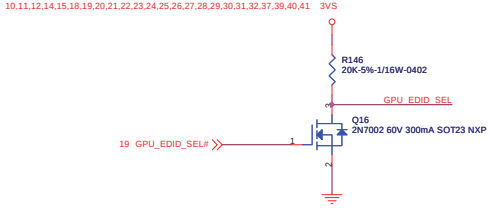

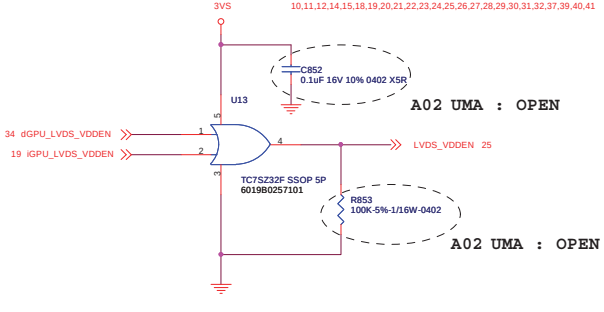

INVENTEC

TITLE
BAP/BXP30
Hybird Switch (2/2)

SIZE	CODE	DOC.NUMBER	REV
Custom	CS	CS-131	X01

CHANGE by IEC | DATE Monday, May 24, 2010 | SHEET 33 of 41

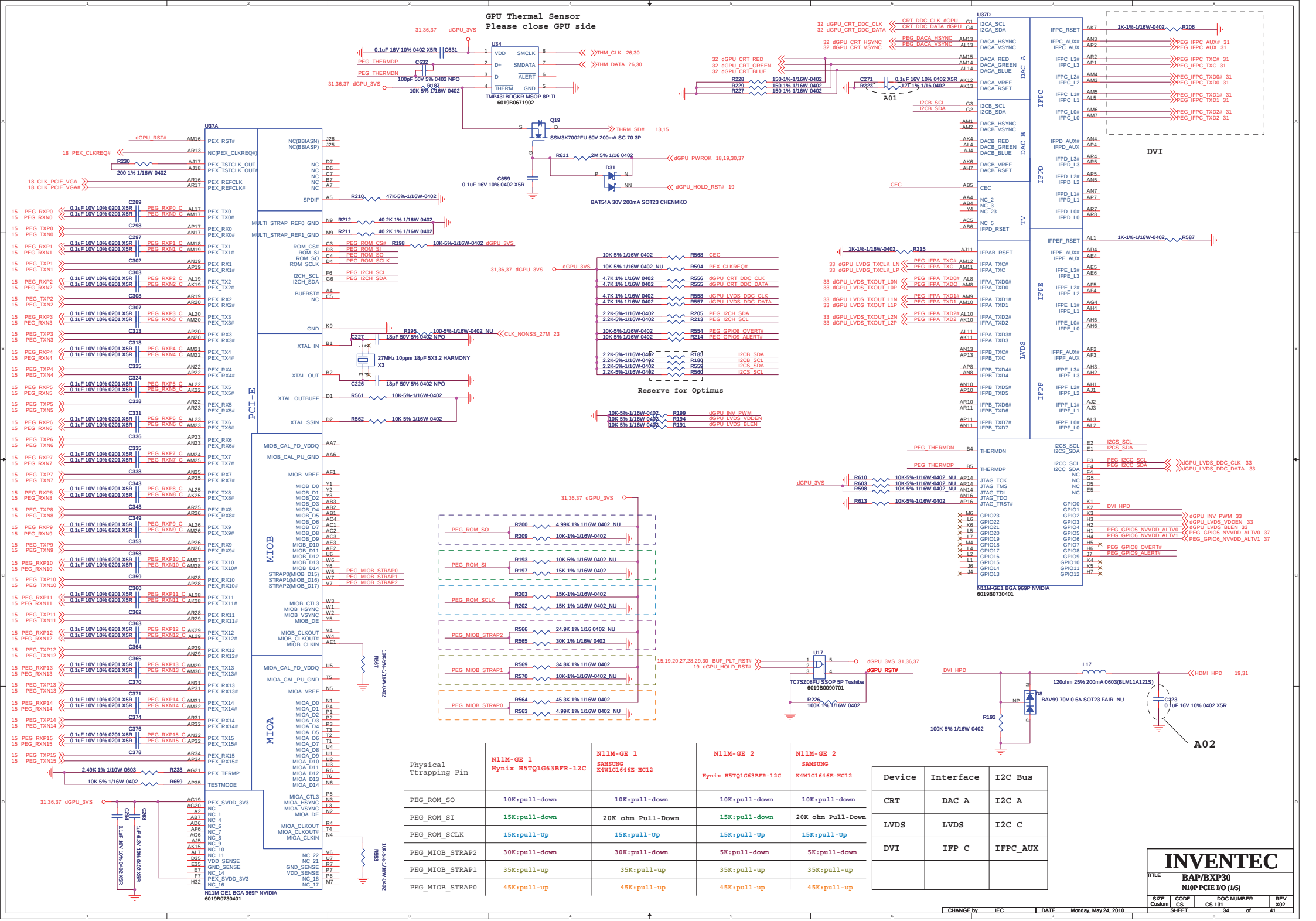

Physical Ttrapping Pin	N11M-GE 1 Hynix H5TQ1G63BFR-12C	N11M-GE 1 SAMSUNG K4W1G1646E-HC12	N11M-GE 2 Hynix H5TQ1G63BFR-12C	N11M-GE 2 SAMSUNG K4W1G1646E-HC12
PEG_ROM_SO	10K:pull-down	10K:pull-down	10K:pull-down	10K:pull-down
PEG_ROM_SI	15K:pull-down	20K ohm Pull-Down	15K:pull-down	20K ohm Pull-Down
PEG_ROM_SCLK	15K:pull-Up	15K:pull-Up	15K:pull-Up	15K:pull-Up
PEG_MIOB_STRAP2	30K:pull-down	30K:pull-down	5K:pull-down	5K:pull-down
PEG_MIOB_STRAP1	35K:pull-up	35K:pull-up	35K:pull-up	35K:pull-up
PEG_MIOB_STRAP0	45K:pull-up	45K:pull-up	45K:pull-up	45K:pull-up

Device	Interface	I2C Bus
CRT	DAC A	I2C A
LVDS	LVDS	I2C C
DVI	IFP C	IFPC_AUX

INVENTEC			
TITLE BAP/BXP30 N10P PCIE I/O (1/5)			
SIZE Custom	CODE CS	DOC.NUMBER CS-131	REV X02
		SHEET 34 of 41	

CHANGE by IEC | DATE Monday, May 24, 2010

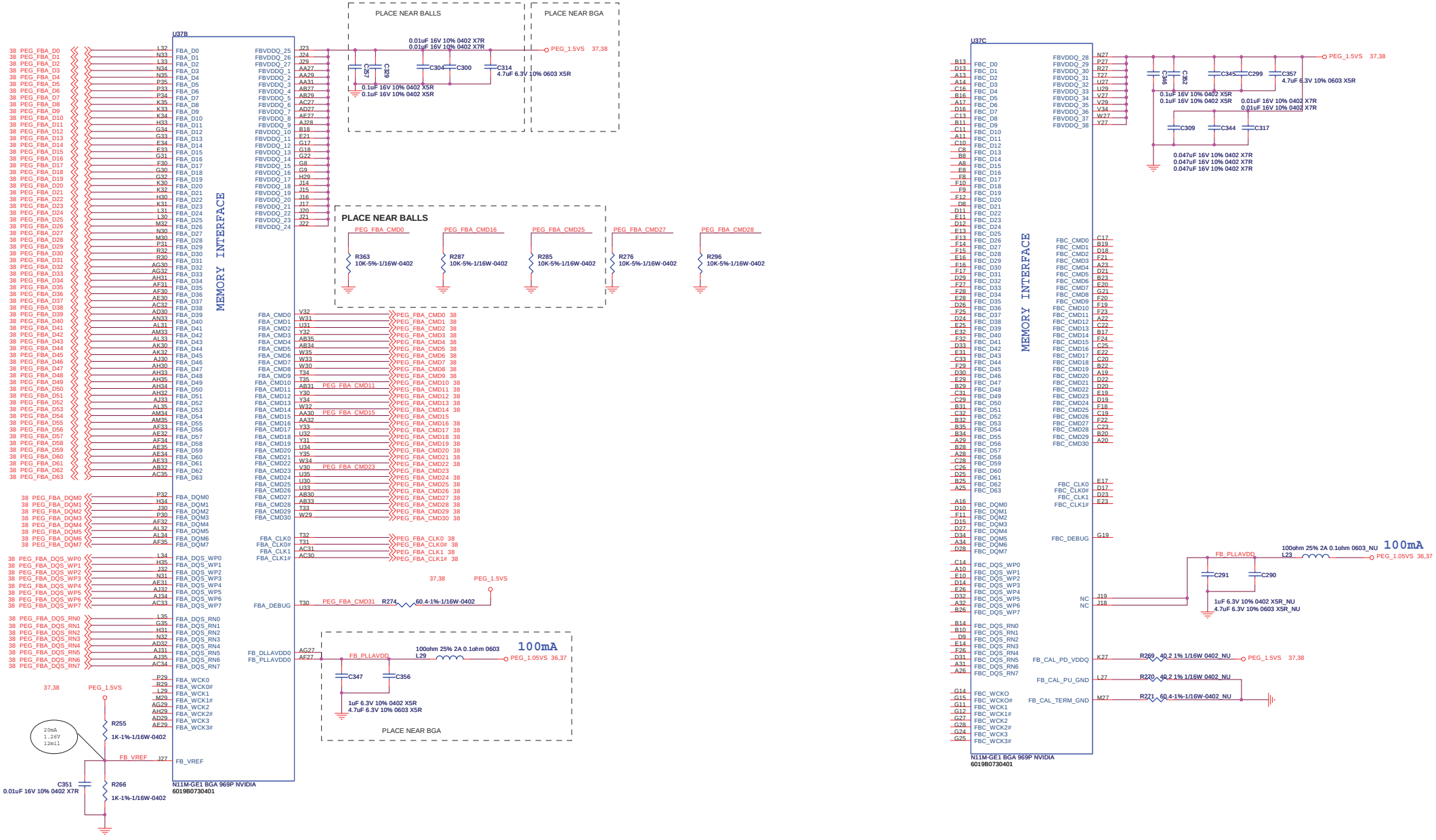

CHANGE by	IEC	DATE	Monday, May 24, 2010

INVENTEC

TITLE: **BAP/BXP30**
N10P Memory (2/5)

SIZE	CODE	DOC.NUMBER	REV
Custom	CS	CS-131	X02

SHEET 35 of 41

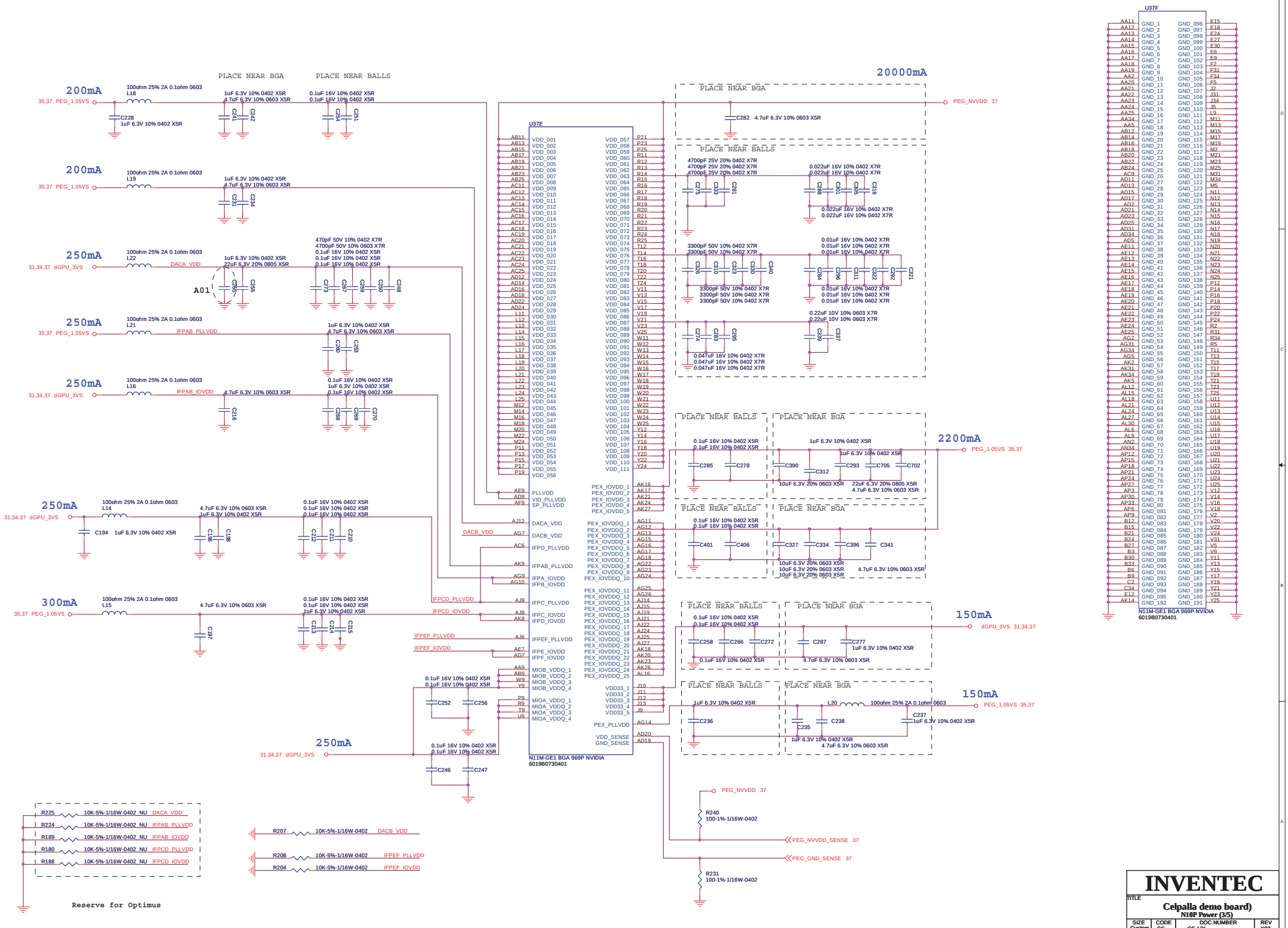

INVENTEC

TITLE: Celpalla demo board) N10P Power (3/5)

SIZE	CODE	DOC.NUMBER	REV
Custom	CS	CS-131	X02

SHEET 36 of 41

CHANGE by	IEC	DATE	Monday, May 24, 2010

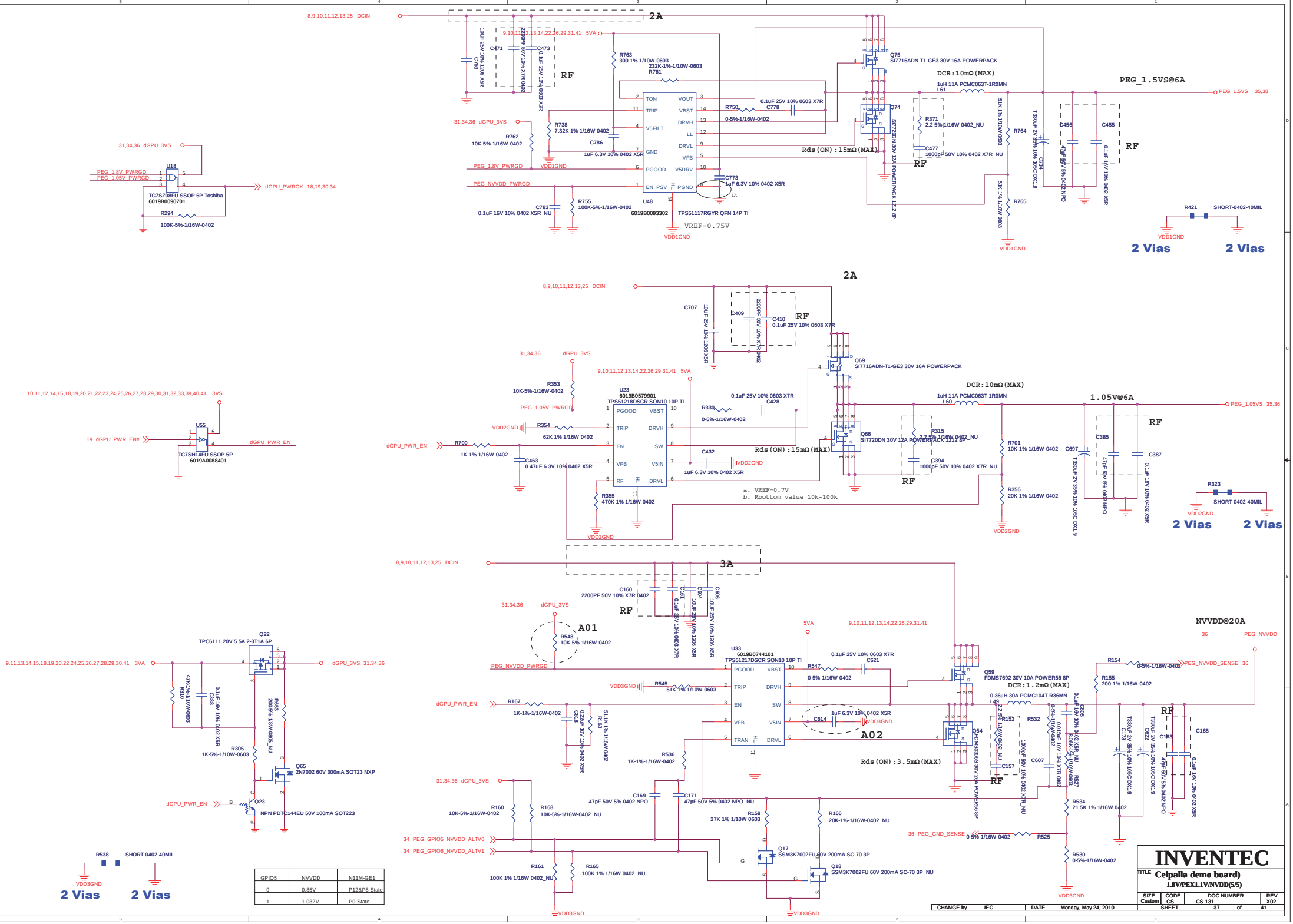

GPIO5	NVVDD	N11M-GE1
0	0.85V	P12&P8-State
1	1.032V	P0-State

INVENTEC

TITLE Celpalla demo board)
1.8V/PEX1.1V/NVDD(5/5)

SIZE	CODE	DOC.NUMBER	REV
Custom	CS	CS-131	X02

SHEET 37 of 41

CHANGE by	IEC	DATE	Monday, May 24, 2010

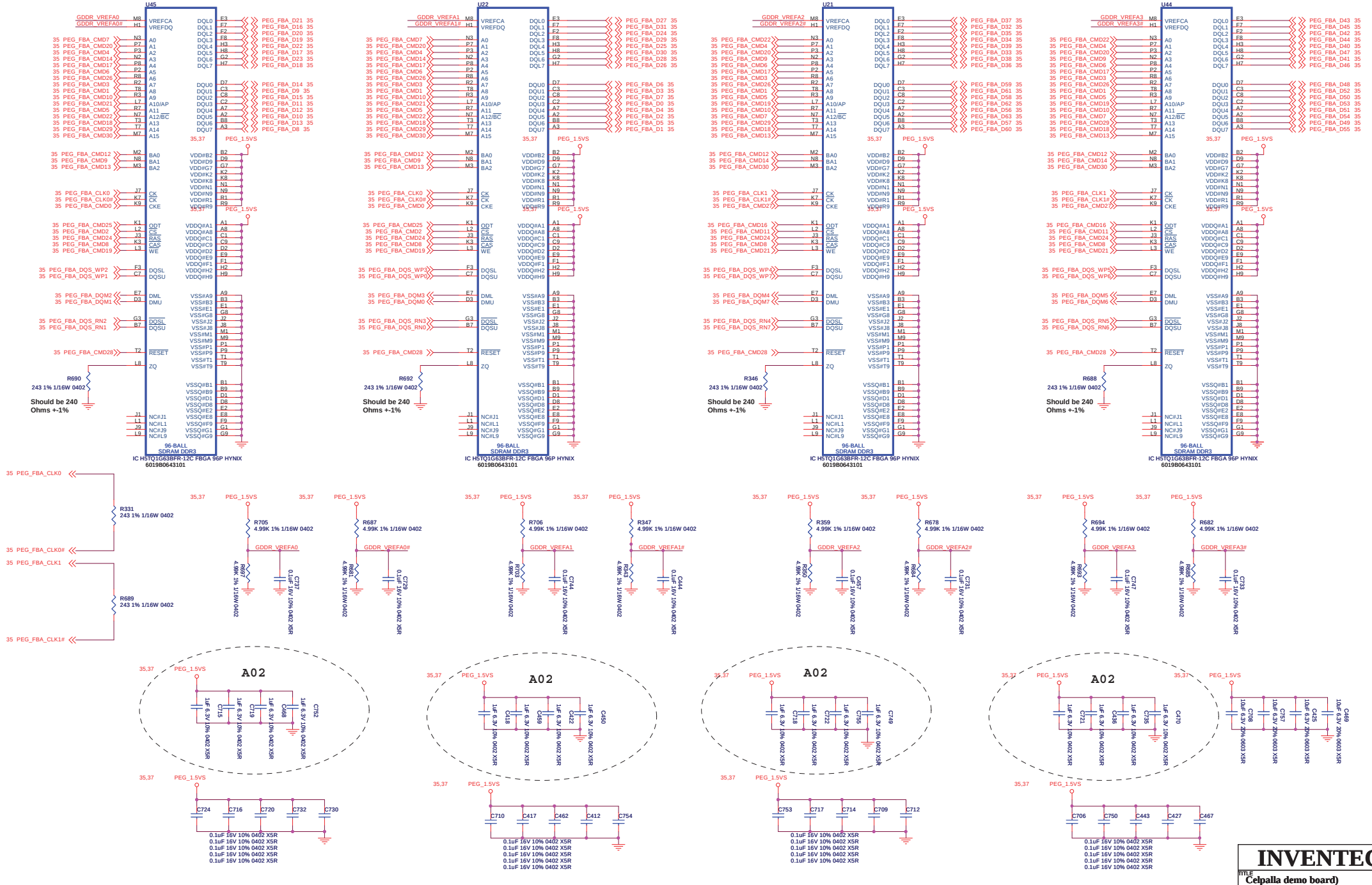
U45
U22
U21
U44
96-BALL SDRAM DDR3
IC H5TQ1G63BFR-12C FBGA 96P HYNIX
6019B0643101
R690 243 1% 1/16W 0402
R692 243 1% 1/16W 0402
R346 243 1% 1/16W 0402
R688 243 1% 1/16W 0402
Should be 240 Ohms +-1%
R331 243 1% 1/16W 0402
R689 243 1% 1/16W 0402
R705 4.99K 1% 1/16W 0402
R687 4.99K 1% 1/16W 0402
R706 4.99K 1% 1/16W 0402
R347 4.99K 1% 1/16W 0402
R359 4.99K 1% 1/16W 0402
R678 4.99K 1% 1/16W 0402
R694 4.99K 1% 1/16W 0402
R682 4.99K 1% 1/16W 0402
A02
PEG_1.5VS
0.1uF 16V 10% 0402 X5R
INVENTEC
Celpalla demo board)
VRAM
SIZE Custom
CODE CS
DOC.NUMBER CS-131
REV X01
SHEET 38 of 41
CHANGE by IEC
DATE Tuesday, May 25, 2010

AUDIO CODEC

Note:

To support Wake-on-Jack, the CODEC VAUX_3.3 pins must be powered by a Standby supply.

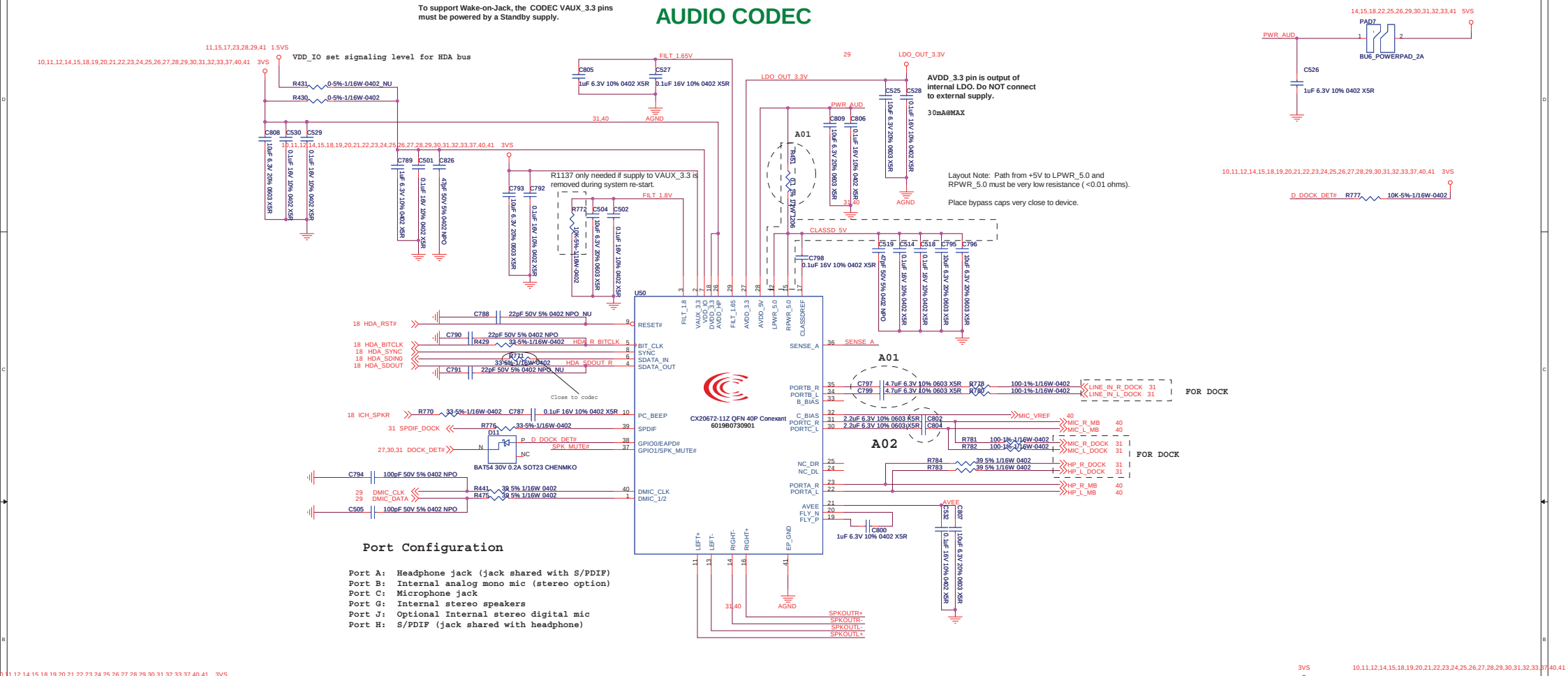

Port Configuration

Port A: Headphone jack (jack shared with S/PDIF)
Port B: Internal analog mono mic (stereo option)
Port C: Microphone jack
Port G: Internal stereo speakers
Port J: Optional Internal stereo digital mic
Port H: S/PDIF (jack shared with headphone)

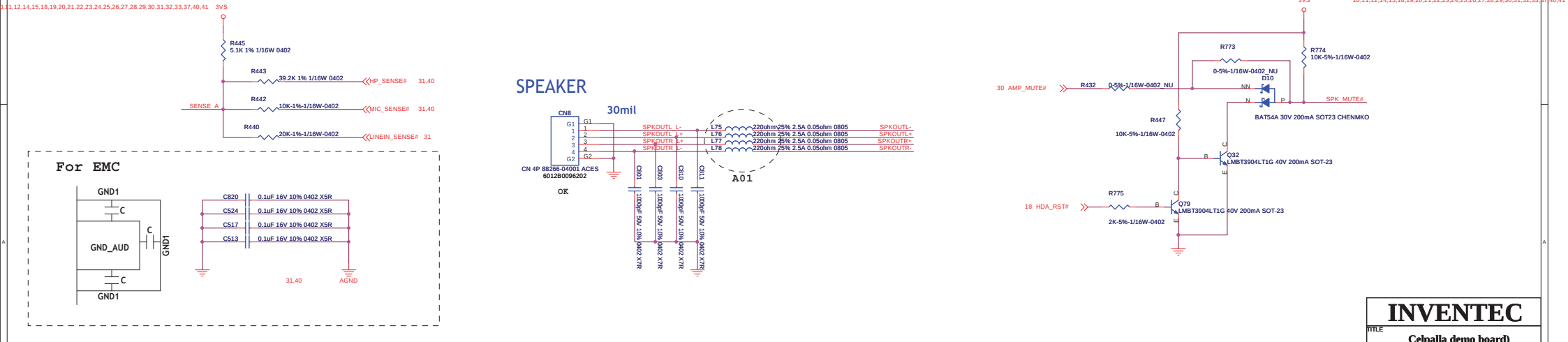

INVENTEC			
TITLE: Celpalla demo board) Audio Codec /AMP			
SIZE: Custom	CODE: CS	DOC.NUMBER: CS-131	REV: X01
CHANGE by: IEC	DATE: Monday, May 24, 2010	SHEET 39 of 41	

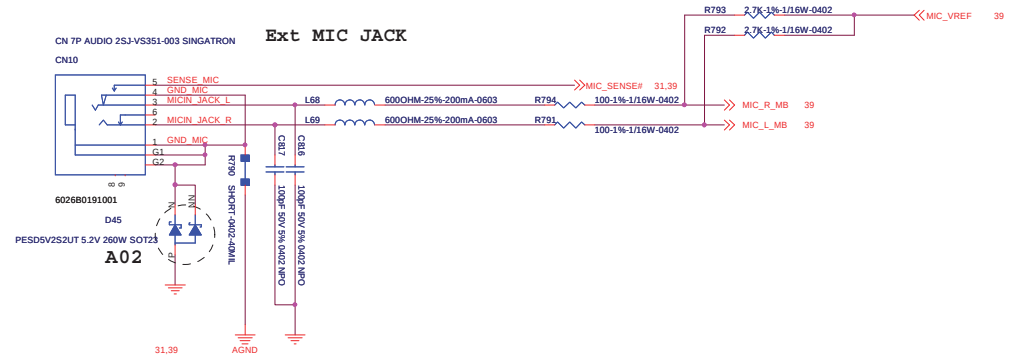

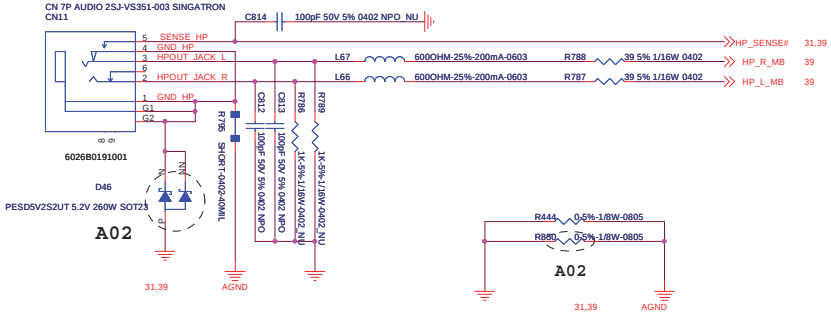

5 in 1 CARDREADER

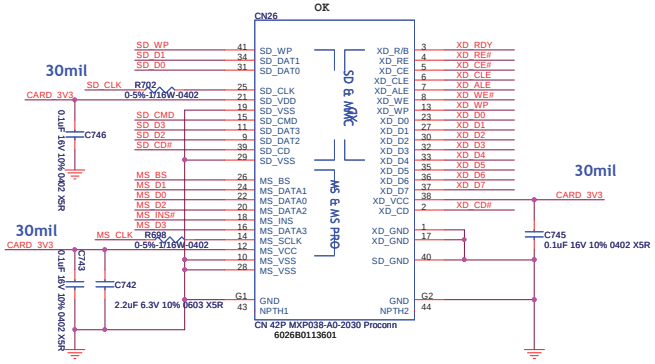

SP1	XD_RDY	SD_WP	MS_CLK
SP2	XD_RE#		MS_INS#
SP3	XD_CE#	SD_D1	
SP4	XD_CLE	SD_D0	MS_D7
SP5	XD_ALE	SD_D7	MS_D3
SP6	XD_WE#	SD_CD#	
SP7	XD_WP	SD_D6	MS_D6
SP8	XD_D0	SD_CLK	MS_D2
SP9	XD_D1	SD_D5	MS_D0
SP10	XD_D2	SD_CMD	
SP11	XD_D3	SD_D4	MS_D4
SP12	XD_D4	SD_D3	MS_D1
SP13	XD_D5	SD_D2	MS_D5
SP14	XD_D6		MS_BS

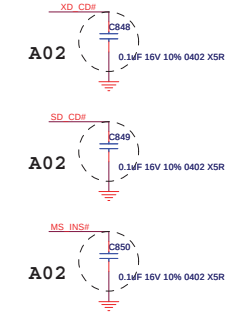

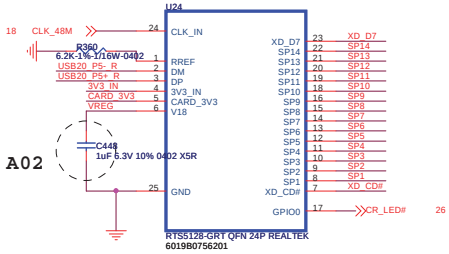

10,11,12,14,15,18,19,20,21,22,23,24,25,26,27,28,29,30,31,32,33,37,39,41 3VS

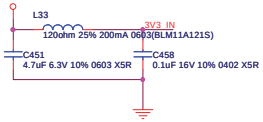

20 USB20_P5-
20 USB20_P5+
R351 0-5%-1/16W-0402 USB20_P5- R
R348 0-5%-1/16W-0402 USB20_P5+ R

INVENTEC					
TITLE	BAP/BXP30 CARD READER/AUDIO BOARD				
SIZE	CODE	DOC.NUMBER		REV	
Custom	A03	D-CS-1310A2271201-ALG		A03	
CHANGE by	<CHANGE by>	DATE	Monday, May 24, 2010	SHEET	40 of 41

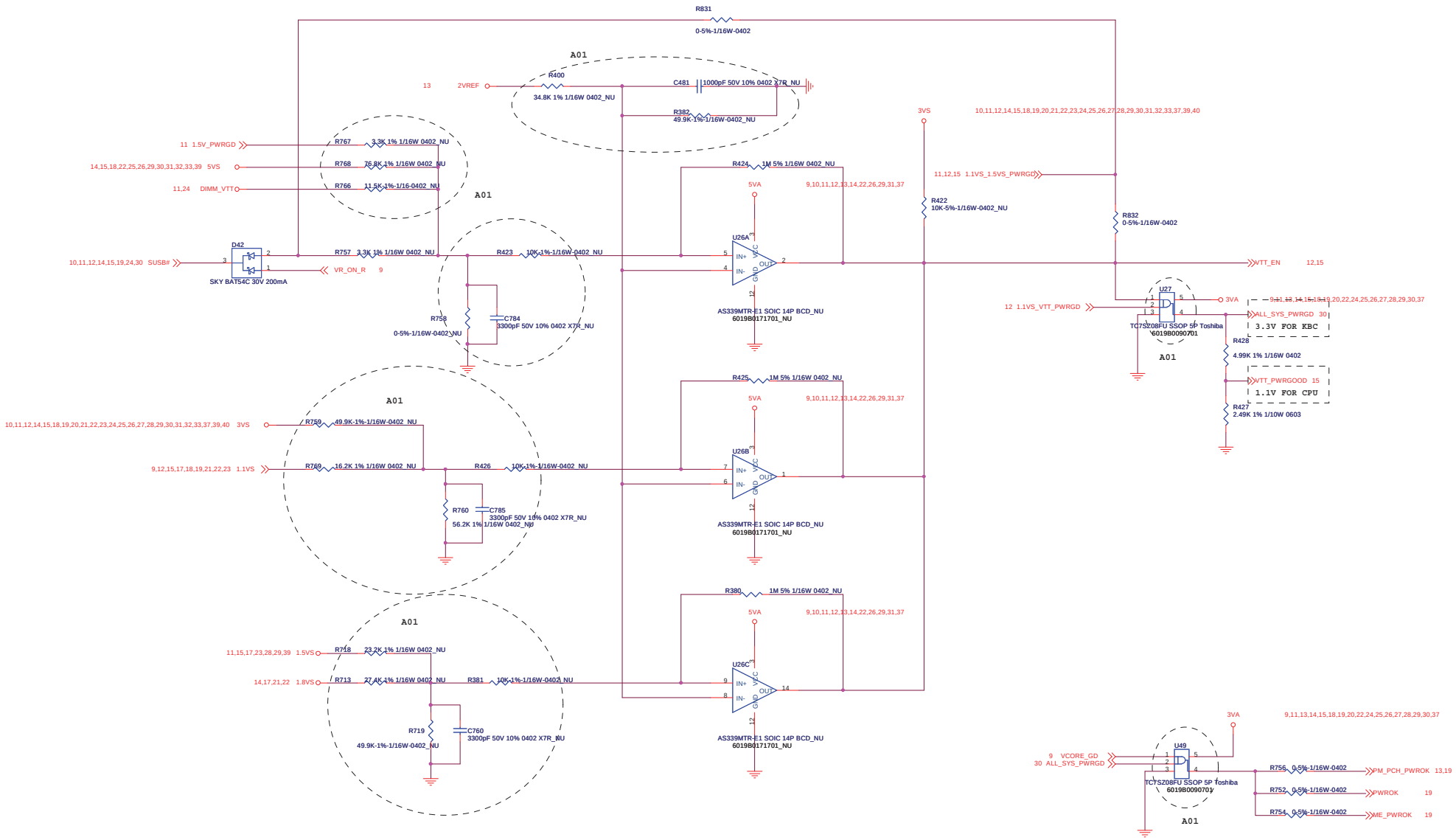

INVENTEC

TITLE
BAP/BXP30
POWER SEQUENCE

SIZE	CODE	DOC.NUMBER	REV
Custom	A03		A03

CHANGE by <CHANGE by> DATE Monday, May 24, 2010 SHEET 41 of 41